ASRock | 20th ANNIVERSARY

X670E TAICHI CARRARA

User Manual

Contact Information

If you need to contact ASRock or want to know more about ASRock, you're welcome to visit ASRock's website at http://www.asrock.com; or you may contact your dealer for further information. For technical questions, please submit a support request form at https://event.asrock.com/tsd.asp

ASRock Incorporation

e-mail: info@asrock.com.tw

ASRock EUROPE B.V.

e-mail: sales@asrock.nl

ASRock America, Inc.

e-mail: sales@asrockamerica.com

Scan the QR code to view more manuals and documents.

Contents

Chapter 1 Introduction **1**

1.1 Package Contents 1

1.2 Specifications 2

1.3 Motherboard Layout 7

1.4 I/O Panel 9

1.5 Block Diagram 11

1.6 802.11ax Wi-Fi 6E Module and ASRock WiFi 2.4/5/6 GHz Antenna 12

1.7 Wireless Dongle USB Bracket 13

1.8 12CM Carrara Edition Cooling FAN 14

Chapter 2 Installation **16**

2.1 Installing the CPU 17

2.2 Installing the CPU Fan and Heatsink 20

2.3 Installing Memory Modules (DIMM) 29

2.4 Connecting the Front Panel Header 31

2.5 Installing the Motherboard 32

2.6 Installing SATA Drives 33

2.7 Installing a Graphics Card 35

2.8 Connecting Peripheral Devices 37

2.9 Connecting the Power Connectors 38

2.10 Power On 39

2.11 Jumpers Setup 40

2.12 Onboard Headers and Connectors 41

2.13 Smart Switches 55

2.14 Dr. Debug 59

2.15 M.2 SSD Module Installation Guide (M2_1) 65

2.16 M.2 SSD Module Installation Guide (M2_2) 70

2.17 M.2 SSD Module Installation Guide (M2_3) 73

2.18 M.2 SSD Module Installation Guide (M2_4) 76

Chapter 1 Introduction

Thank you for purchasing ASRock X670E Taichi Carrara motherboard, a reliable motherboard produced under ASRock's consistently stringent quality control. It delivers excellent performance with robust design conforming to ASRock's commitment to quality and endurance.

Because the motherboard specifications and the BIOS software might be updated, the content of this documentation will be subject to change without notice. In case any modifications of this documentation occur, the updated version will be available on ASRock's website without further notice. If you require technical support related to this motherboard, please visit our website for specific information about the model you are using. You may find the latest VGA cards and CPU support list on ASRock's website as well. ASRock website http://www.asrock.com.

1.1 Package Contents

- ASRock X670E Taichi Carrara Motherboard (EATX Form Factor)
- ASRock X670E Taichi Carrara User Manual
- 4 x Serial ATA (SATA) Data Cables (Optional)
- 1 x Wireless Dongle USB Bracket (Optional)
- 1 x Blazing M.2 Gen5 Fan Heatsink (Optional)
- 1 x 12CM Carrara Edition Cooling FAN (Optional)
- 1 x ASRock WiFi 2.4/5/6 GHz Antenna (Optional)
- 4 x Screws for M.2 Sockets (Optional)
- 1 x Standoff for M.2 Socket (Optional)

1.2 Specifications

Platform	• EATX Form Factor • 8 Layer PCB
CPU	• Supports AMD Socket AM5 Ryzen™ 7000 Series Processors • Supports ASRock Hyper BCLK Engine
Chipset	• AMD X670
Memory	• Dual Channel DDR5 Memory Technology • 4 x DDR5 DIMM Slots • Supports DDR5 non-ECC, un-buffered memory up to 7800+(OC)* • Max. capacity of system memory: 192GB • Supports Extreme Memory Profile (XMP) and EXTended Profiles for Overclocking (EXPO) memory modules * Please refer to Memory Support List on ASRock's website for more information. (http://www.asrock.com/)
Expansion Slot	CPU: • 2 x PCIe 5.0 x16 Slots (PCIE1 and PCIE2), support x16 or x8/x8 modes* Chipset: • 1 x Vertical M.2 Socket (Key E), supports type 2230 WiFi/BT PCIe WiFi module * Supports NVMe SSD as boot disks • Supports AMD CrossFire™ • 15μ Gold Contact in VGA PCIe Slot (PCIE1)
Graphics	• Integrated AMD RDNA™ 2 graphics (Actual support may vary by CPU) • 1 x HDMI 2.1 TMDS/FRL 8G Compatible, supports HDR, HDCP 2.3 and max. resolution up to 4K 120Hz • 2 x USB4, support HDCP 2.3 and max. resolution up to 8K 60Hz*

English

* Only the CPU's embedded graphics can be displayed through USB4 ports. If you want to display to a Type-C monitor, please use CPU models with embedded graphics.

Audio	• 5.1 CH HD Audio with Content Protection (Realtek ALC4082 Audio Codec) • WIMA Audio Capacitors (For Front Outputs) • ESS SABRE9218 DAC for Front Panel Audio (130dB SNR) • Individual PCB Layers for R/L Audio Channel • Impedance Sensing on Rear Out port • Nahimic Audio
LAN	• 2.5 Gigabit LAN 10/100/1000/2500 Mb/s • Killer® E3100G • Supports Killer LAN Software • Supports Killer DoubleShot™ Pro
Wireless LAN	• 802.11ax Wi-Fi 6E Module • Supports IEEE 802.11a/b/g/n/ac/ax • Supports Dual-Band 2x2 160MHz with extended 6GHz band* support * Wi-Fi 6E (6GHz band) will be supported by Microsoft® Windows® 11. The availability will depend on the different regulation status of each country and region. It will be activated (for supported countries) through Windows Update and software updates once available. * A 6GHz compatible router is required for 6E functionality. • 2 antennas to support 2 (Transmit) x 2 (Receive) diversity technology • Supports Bluetooth + High speed class II • Supports MU-MIMO • Supports Killer LAN Software • Supports Killer DoubleShot™ Pro
USB	• 2 x USB4 Type-C (Rear) • 1 x USB 3.2 Gen2x2 Type-C (Front) • 5 x USB 3.2 Gen2 Type-A (Rear)

- 7 x USB 3.2 Gen1 (3 Rear, 4 Front)
- 4 x USB 2.0 (Front)

* All USB ports support ESD Protection

Rear Panel I/O

- 2 x Antenna Ports
- 1 x HDMI Port
- 1 x Optical SPDIF Out Port
- 2 x USB4 Type-C Ports (40 Gb/s)*
- 5 x USB 3.2 Gen2 Type-A Ports (10 Gb/s) (ReDriver) (USB32_12 are Lightning Gaming Ports. USB32_3 supports Ultra USB Power.)
- 3 x USB 3.2 Gen1 Ports
- 1 x RJ-45 LAN Port
- 1 x Clear CMOS Button
- 1 x BIOS Flashback Button
- 1 x Line Out Jack (Gold Audio Jack)
- 1 x Microphone Input Jack (Gold Audio Jack)

* Supports USB PD 3.0 up to 9V@3A (27W) / 5V@3A (15W) charging

Storage

CPU:

- 1 x Blazing M.2 Socket (M2_1, Key M), supports type 2280 PCIe Gen5x4 (128 Gb/s) mode*

Chipset:

- 1 x Hyper M.2 Socket (M2_2, Key M), supports type 2230/2242/2260/2280/22110 SATA3 6.0 Gb/s & PCIe Gen4x4 (64 Gb/s) modes*
- 1 x Hyper M.2 Socket (M2_3, Key M), supports type 2280 PCIe Gen4x4 (64 Gb/s) mode*
- 1 x Hyper M.2 Socket (M2_4, Key M), supports type 2280 PCIe Gen4x4 (64 Gb/s) mode*
- 4 x SATA3 6.0 Gb/s Connectors

ASMedia ASM1061:

- 4 x SATA3 6.0 Gb/s Connectors**

* Supports NVMe SSD as boot disks
* Supports ASRock U.2 Kit
** If M2_2 is occupied by a SATA-type M.2 device, SATA3_A1 will be disabled.

RAID	• Supports RAID 0, RAID 1 and RAID 10 for SATA storage devices • Supports RAID 0, RAID 1 and RAID 10 for M.2 NVMe storage devices
Connector	• 1 x Power LED and Speaker Header • 1 x RGB LED Header* • 3 x Addressable LED Headers** • 1 x CPU Fan Connector (4-pin)*** • 1 x CPU/Water Pump Fan Connector (4-pin) (Smart Fan Speed Control)**** • 6 x Chassis/Water Pump Fan Connectors (4-pin) (Smart Fan Speed Control)***** • 1 x 24 pin ATX Power Connector (Hi-Density Power Connector) • 2 x 8 pin 12V Power Connectors (Hi-Density Power Connector) • 1 x Front Panel Audio Connector (15μ Gold Audio Connector) • 2 x USB 2.0 Headers (Support 4 USB 2.0 ports) • 2 x USB 3.2 Gen1 Headers (Support 4 USB 3.2 Gen1 ports) • 1 x Front Panel Type C USB 3.2 Gen2x2 Header (20 Gb/s) • 1 x Dr. Debug with LED • 1 x Power Button with LED • 1 x Reset Button with LED * Supports in total up to 12V/3A, 36W LED Strip ** Support in total up to 5V/3A, 15W LED Strip *** CPU_FAN1 supports the fan power up to 1A (12W). **** CPU_FAN2/WP_3A supports the fan power up to 3A (36W). ***** CHA_FAN1~6/WP support the fan power up to 2A (24W). ***** CPU_FAN2/WP_3A and CHA_FAN1~6/WP can auto detect if 3-pin or 4-pin fan is in use.
BIOS Feature	• AMI UEFI Legal BIOS with GUI support

English

OS	• Microsoft® Windows® 10 64-bit / 11 64-bit
Certifications	• FCC, CE • ErP/EuP ready (ErP/EuP ready power supply is required)

** For detailed product information, please visit our website: http://www.asrock.com*

Please realize that there is a certain risk involved with overclocking, including adjusting the setting in the BIOS, applying Untied Overclocking Technology, or using third-party overclocking tools. Overclocking may affect your system's stability, or even cause damage to the components and devices of your system. It should be done at your own risk and expense. We are not responsible for possible damage caused by overclocking.

1.3 Motherboard Layout

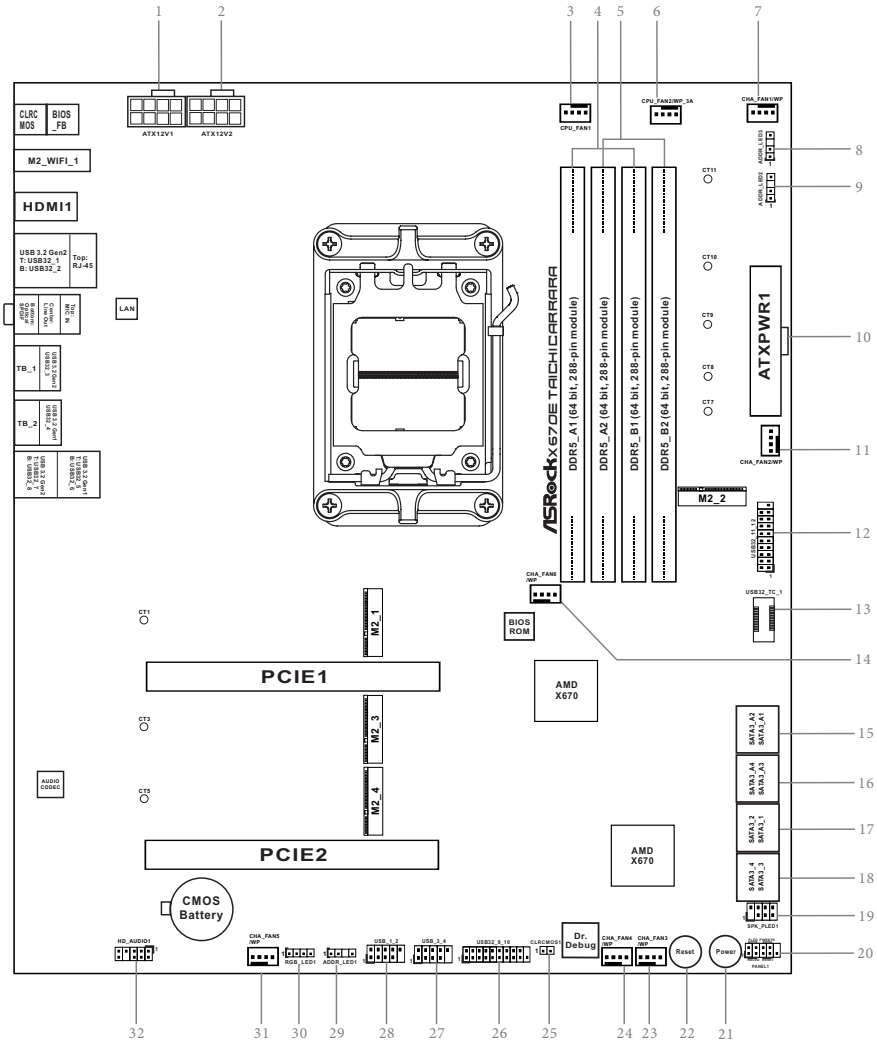

English

No.	Description
1	8 pin 12V Power Connector (ATX12V1)
2	8 pin 12V Power Connector (ATX12V2)
3	CPU Fan Connector (CPU_FAN1)
4	2 x 288-pin DDR5 DIMM Slots (DDR5_A1, DDR5_B1)
5	2 x 288-pin DDR5 DIMM Slots (DDR5_A2, DDR5_B2)
6	CPU/Water Pump Fan Connector (CPU_FAN2/WP_3A)
7	Chassis/Water Pump Fan Connector (CHA_FAN1/WP)
8	Addressable LED Header (ADDR_LED3)
9	Addressable LED Header (ADDR_LED2)
10	ATX Power Connector (ATXPWR1)
11	Chassis/Water Pump Fan Connector (CHA_FAN2/WP)
12	USB 3.2 Gen1 Header (USB32_11_12)
13	Front Panel Type C USB 3.2 Gen2x2 Header (USB32_TC_1)
14	Chassis/Water Pump Fan Connector (CHA_FAN6/WP)
15	SATA3 Connectors (SATA3_A2)(Upper), (SATA3_A1)(Lower)
16	SATA3 Connectors (SATA3_A4)(Upper), (SATA3_A3)(Lower)
17	SATA3 Connectors (SATA3_2)(Upper), (SATA3_1)(Lower)
18	SATA3 Connectors (SATA3_4)(Upper), (SATA3_3)(Lower)
19	Power LED and Speaker Header (SPK_PLED1)
20	System Panel Header (PANEL1)
21	Power Button (PWRBTN1)
22	Reset Button (RSTBTN1)
23	Chassis/Water Pump Fan Connector (CHA_FAN3/WP)
24	Chassis/Water Pump Fan Connector (CHA_FAN4/WP)
25	Clear CMOS Jumper (CLRCMOS1)
26	USB 3.2 Gen1 Header (USB32_9_10)
27	USB 2.0 Header (USB_3_4)
28	USB 2.0 Header (USB_1_2)
29	Addressable LED Header (ADDR_LED1)
30	RGB LED Header (RGB_LED1)
31	Chassis/Water Pump Fan Connector (CHA_FAN5/WP)
32	Front Panel Audio Header (HD_AUDIO1)

1.4 I/O Panel

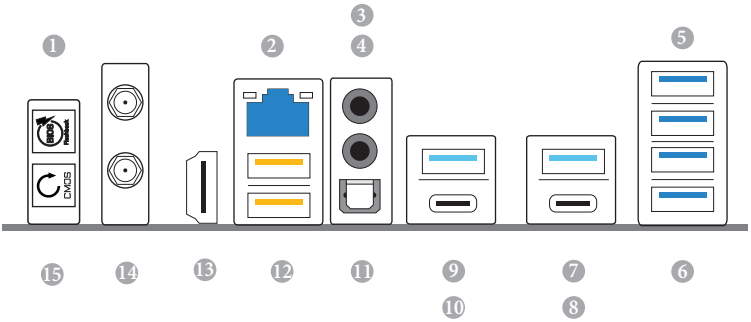

No.	Description	No.	Description
1	BIOS Flashback Button	9	USB 3.2 Gen2 Type-A Port (USB32_3)***
2	2.5G LAN RJ-45 Port*	10	USB4 Type-C Port
3	Microphone Input Jack**	11	Optical SPDIF Out Port
4	Line Out Jack**	12	USB 3.2 Gen2 Type-A Ports (USB32_12)****
5	USB 3.2 Gen1 Type-A Ports (USB32_56)	13	HDMI Port
6	USB 3.2 Gen2 Type-A Ports (USB32_78)	14	Antenna Ports
7	USB 3.2 Gen1 Type-A Port (USB32_4)	15	Clear CMOS Button
8	USB4 Type-C Port		

English

There are two LEDs on each LAN port. Please refer to the table below for the LAN port LED indications.

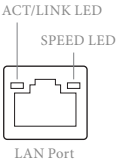

Activity / Link LED		Speed LED	
Status	**Description**	**Status**	**Description**
Off	No Link	Off	10Mbps connection
Blinking	Data Activity	Orange	100Mbps/1Gbps connection
On	Link	Green	2.5Gbps connection

** ***Function of the Audio Ports in 2, 4 or 5.1-channel Configuration***:

Channel	Port	Function
2ch	Line Out Jack (Rear Panel)	Front speaker out
4ch	Pink-Mic (Front Panel)	Rear speaker out
5.1ch	Microphone Input Jack (Rear Panel)	Central/Subwoofer speaker out

*** *Ultra USB Power is supported on USB32_3 port. ACPI wake-up function is not supported on USB32_3 port.*

**** *USB32_12 are the Lightning Gaming Ports.*

1.5 Block Diagram

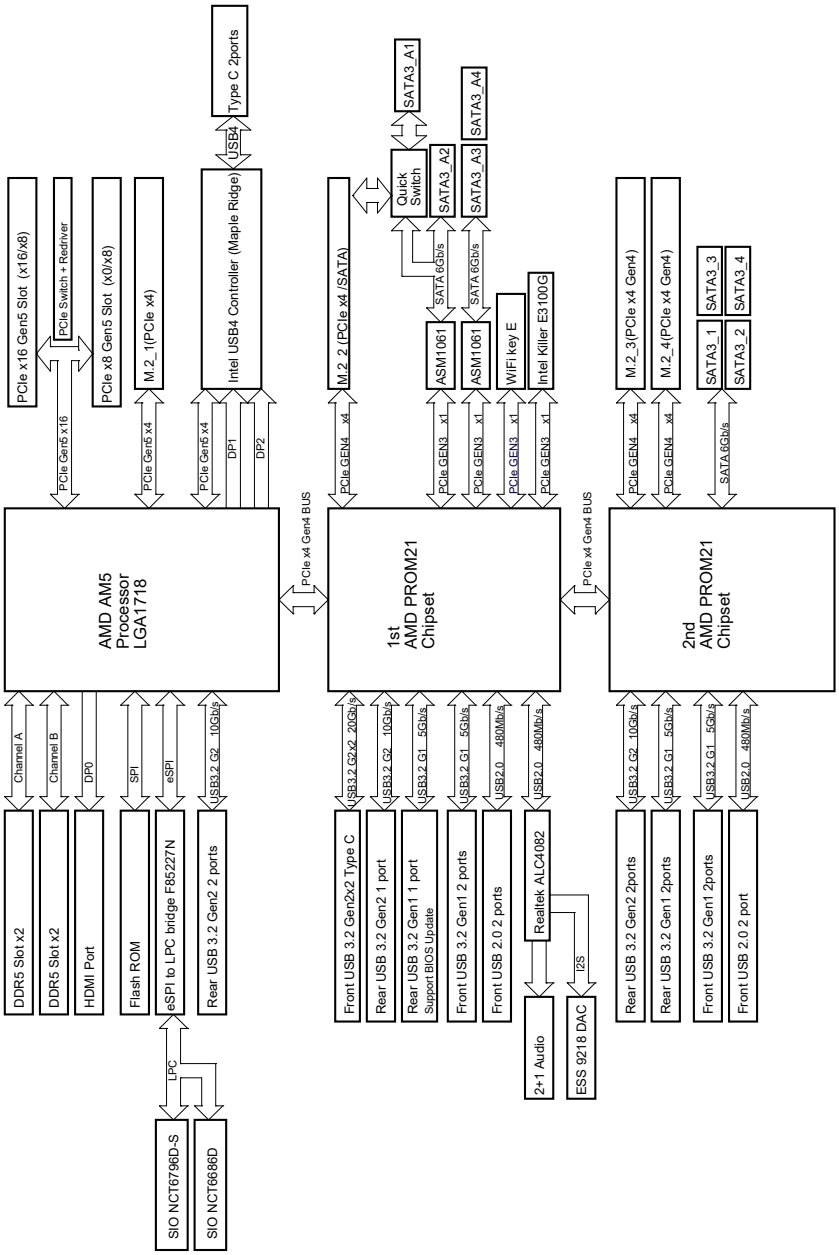

English

1.6 802.11ax Wi-Fi 6E Module and ASRock WiFi 2.4/5/6 GHz Antenna

802.11ax Wi-Fi 6E + BT Module

This motherboard comes with an exclusive 802.11 a/b/g/n/ac/ax Wi-Fi 6E + BT module that offers support for 802.11 a/b/g/n/ac/ax Wi-Fi 6E connectivity standards and Bluetooth. Wi-Fi 6E + BT module is an easy-to-use wireless local area network (WLAN) adapter to support Wi-Fi 6E + BT. Bluetooth standard features Smart Ready technology that adds a whole new class of functionality into the mobile devices. BT also includes Low Energy Technology and ensures extraordinary low power consumption for PCs.

* The transmission speed may vary according to the environment.
* Wi-Fi 6E (6GHz band) will be supported by Microsoft® Windows® 11. The availability will depend on the different regulation status of each country and region. It will be activated (for supported countries) through Windows Update and software updates once available.
* A 6GHz compatible router is required for 6E functionality.

ASRock WiFi 2.4/5/6 GHz Antenna

1.7 Wireless Dongle USB Bracket

Installing the Wireless Dongle USB Bracket

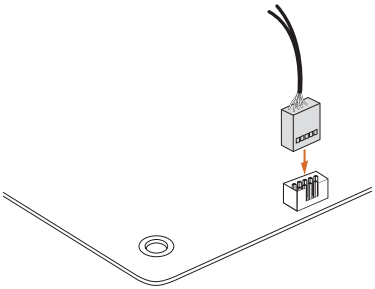

Step 1

Plug the Wireless Dongle USB Bracket into the USB 2.0 header on your motherboard.

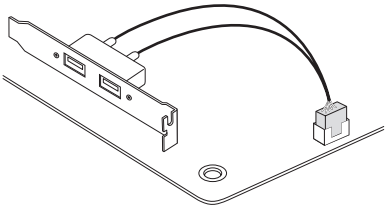

Step 2

Now you have two external USB 2.0 ports at hand.
*We recommend you plugging wireless devices dongle into these USB 2.0 ports for the best wireless signal quality.

1.8 12CM Carrara Edition Cooling FAN

Before installing the cooling fan, please make sure that your motherboard is properly installed into a PC case.

Installing the 12CM Carrara Edition Cooling FAN

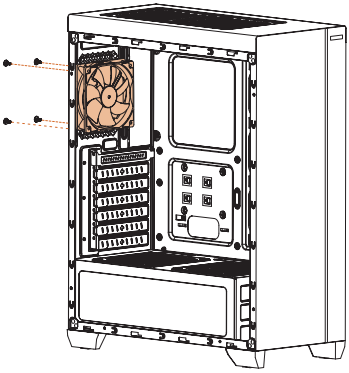

Step 1

Place the 12CM Carrara Edition Cooling FAN to the rear of your PC case with screw holes aligned. Then secure it with 4 screws.

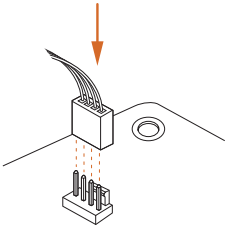

Step 2

Plug the attached fan cable to a free fan connector on the motherboard.

Specifications

Fan Dimension	120 x 120 x 26.7mm
Rated Voltage	DC 12V
Fan Speed	800~2500 RPM
Air Pressure	4.25 mmAq
Airflow	76.21 CFM
Rated Current	AT 25°C 0.35 A Duty cycle=100%
Rated Power	AT 25°C 4.2 W Duty cycle=100%
Sound Level	43.8 dB-A (MAX:46.8dBA)
Operation Voltage	DC 6.0V~13.2V
Start-Up Voltage	DC 6.0V (25°C Power ON/OFF) Duty cycle=100%
Operating Temperature Range	-10°C~+70 °C
Storage Temperature Range	-40°C~+70 °C
Operating/Staorage Humidity	5~90% RH

Chapter 2 Installation

This is an EATX form factor motherboard. Before you install the motherboard, study the configuration of your chassis to ensure that the motherboard fits into it.

Pre-installation Precautions

Take note of the following precautions before you install motherboard components or change any motherboard settings.

- Make sure to unplug the power cord before installing or removing the motherboard components. Failure to do so may cause physical injuries and damages to motherboard components.
- In order to avoid damage from static electricity to the motherboard's components, NEVER place your motherboard directly on a carpet. Also remember to use a grounded wrist strap or touch a safety grounded object before you handle the components.
- Hold components by the edges and do not touch the ICs.
- Whenever you uninstall any components, place them on a grounded anti-static pad or in the bag that comes with the components.
- When placing screws to secure the motherboard to the chassis, please do not over-tighten the screws! Doing so may damage the motherboard.

2.1 Installing the CPU

1. *Before you insert the 1718-Pin CPU into the socket, please check if the **PnP cap** is on the socket, if the CPU surface is unclean, or if there are any **bent pins** in the socket. Do not force to insert the CPU into the socket if above situation is found. Otherwise, the CPU will be seriously damaged.*
2. *Unplug all power cables before installing the CPU.*

Tutorial Video

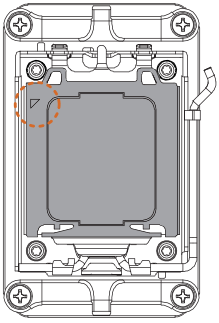

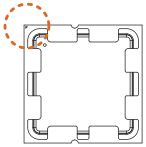

Turn your CPU to the correct orientation before opening the CPU socket cover.

1

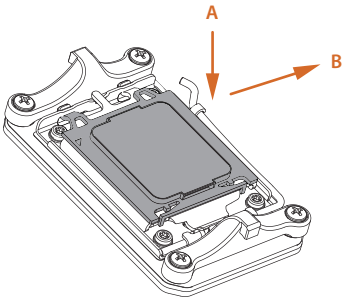

2

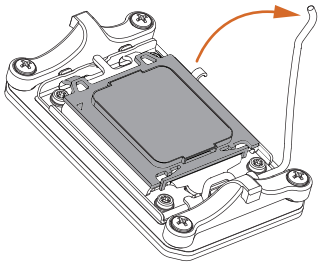

3

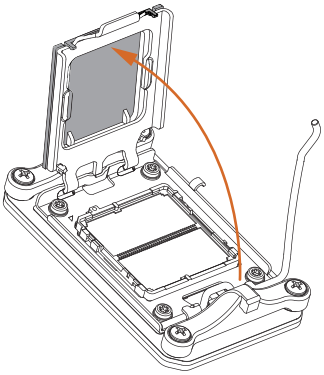

4

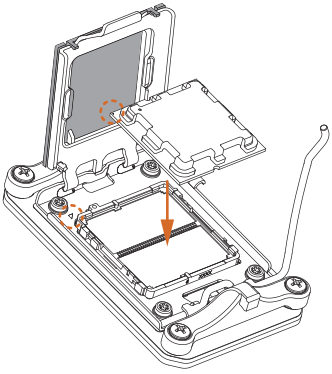

⚠ Carefully place the CPU in as flat as possible. Do not drop it.

English

5

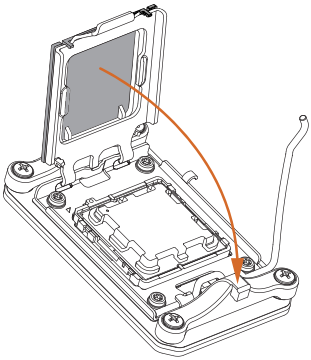

6

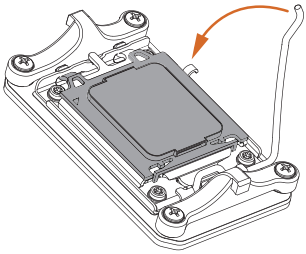

Make sure the CPU is aligned with the socket before locking it into place.

7

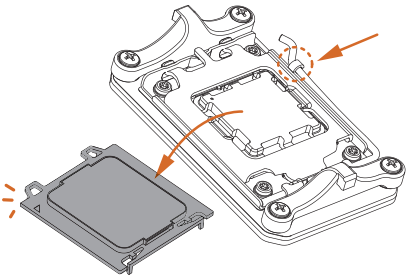

Make sure the black cover plate is always in place until it pops off when closing the socket lever.

Please save the cover if the processor is removed. The cover must be placed if you wish to return the motherboard for after service.

English

2.2 Installing the CPU Fan and Heatsink

After you install the CPU into this motherboard, it is necessary to install a larger heatsink and cooling fan to dissipate heat. You also need to spray thermal grease between the CPU and the heatsink to improve heat dissipation. Make sure that the CPU and the heatsink are securely fastened and in good contact with each other.

Please turn off the power or remove the power cord before changing a CPU or heatsink.

Installing the CPU Cooler (Type 1)

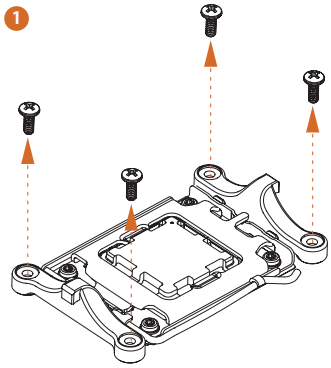

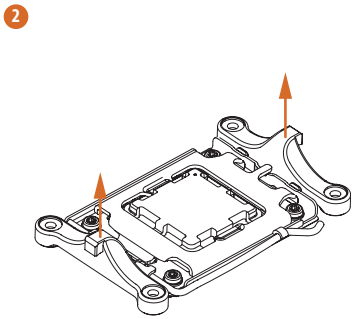

3

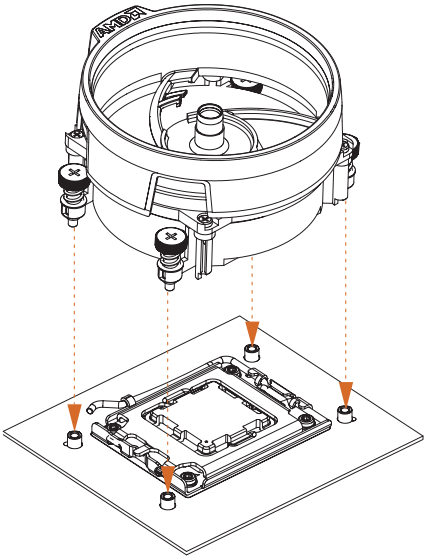

4

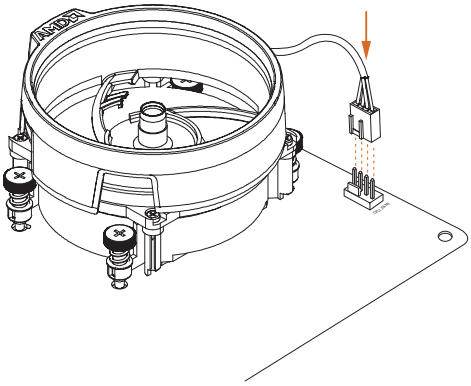

Installing the CPU Cooler (Type 2)

1

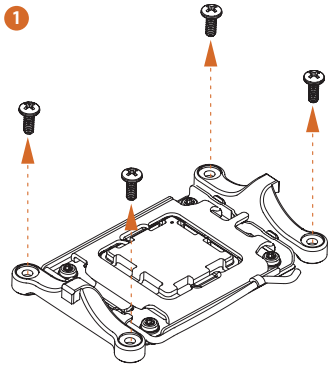

2

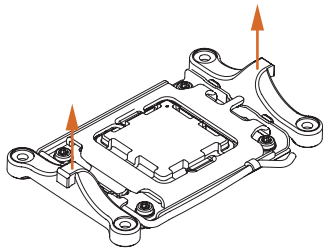

3

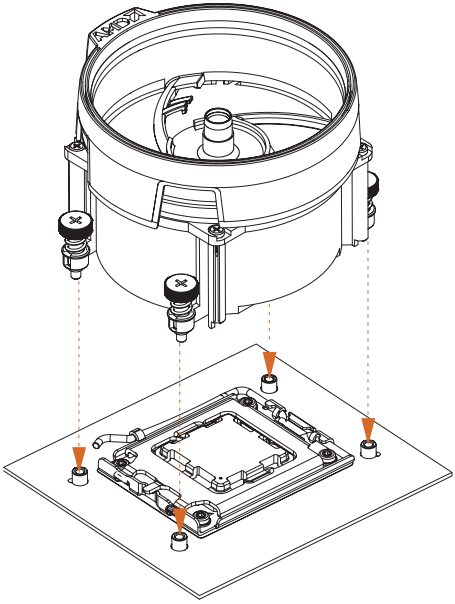

4

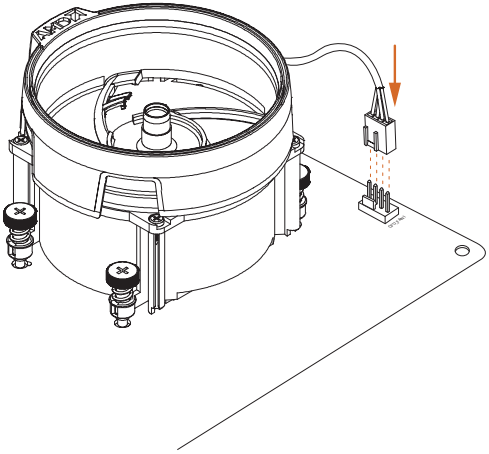

5

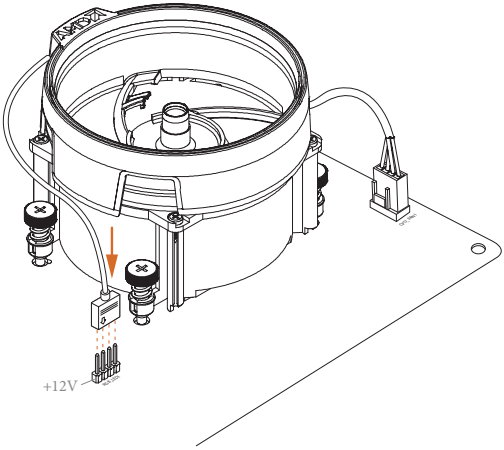

*The illustrations shown here are for reference purposes only and may not exactly match the model you purchase.

Installing the CPU Cooler (Type 3)

1

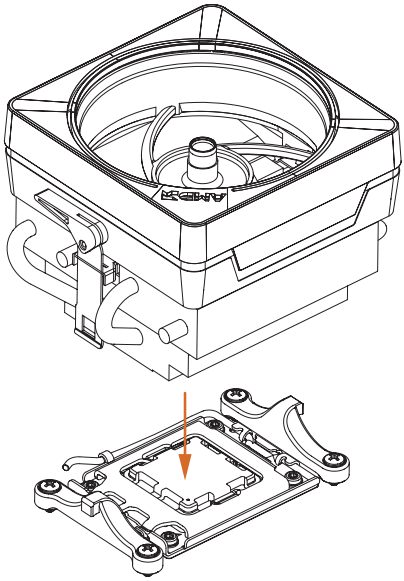

2

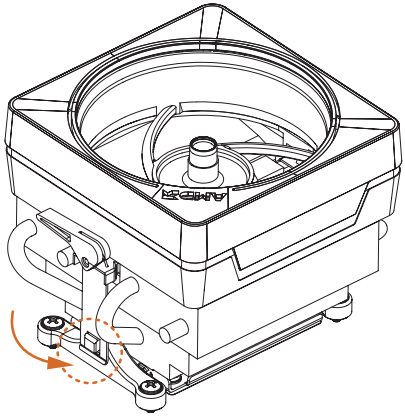

3

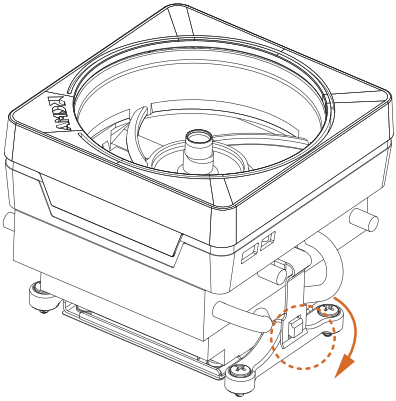

4

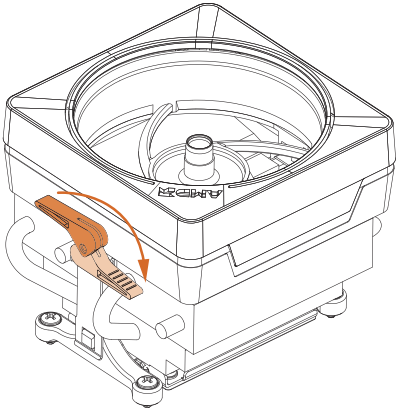

5

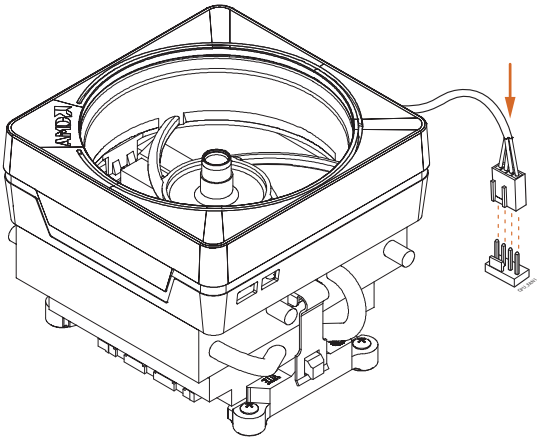

6

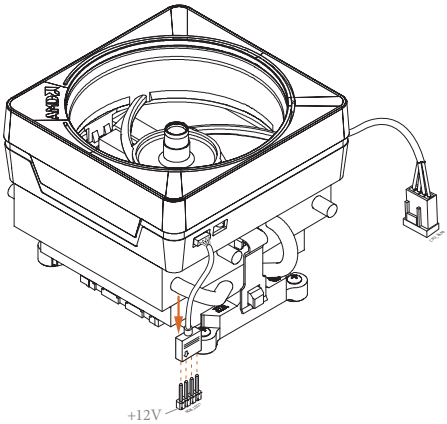

or

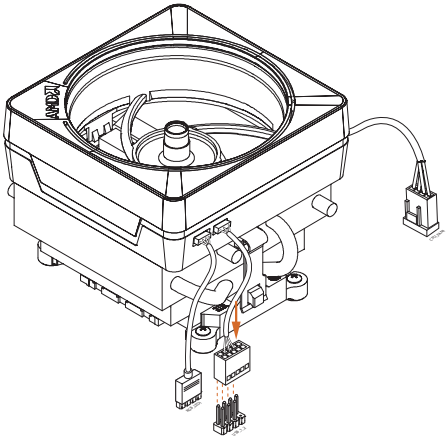

Please note that only one cable should be used at a time in this step.
If you select RGB_LED1, please install ASRock utility "ASRock Polychrome SYNC".
If you select USB connector, please install AMD utility "SR3 Settings Software".

*The illustrations shown here are for reference purposes only and may not exactly match the model you purchase.

2.3 Installing Memory Modules (DIMM)

This motherboard provides four 288-pin DDR5 (Double Data Rate 5) DIMM slots, and supports Dual Channel Memory Technology.

1. *For dual channel configuration, you always need to install identical (the same brand, speed, size and chip-type) DDR5 DIMM pairs.*
2. *It is unable to activate Dual Channel Memory Technology with only one or three memory module installed.*
3. *It is not allowed to install a DDR, DDR2 , DDR3 or DDR4 memory module into a DDR5 slot; otherwise, this motherboard and DIMM may be damaged.*
4. *The DIMM only fits in one correct orientation. It will cause permanent damage to the motherboard and the DIMM if you force the DIMM into the slot at incorrect orientation.*

Recommended Memory Configuration

1 DIMM

A1	A2	B1	B2
			V

2 DIMMs

A1	A2	B1	B2
	V		V

4 DIMMs

A1	A2	B1	B2
V	V	V	V

The first boot may take some time.
Please be patient and refer to the following table for booting time.
*It may vary by different setups.

Memory	1st boot after clear CMOS
2 x 16GB	90 sec
2 x 32GB	150 sec
4 x 16GB	170 sec
4 x 32GB	315 sec

English

1

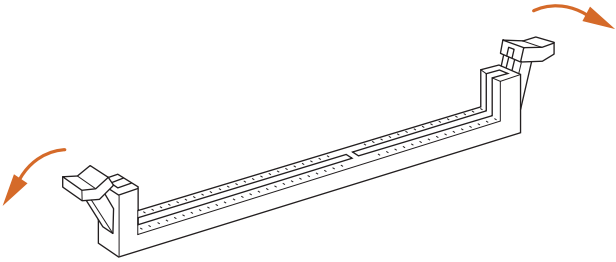

2

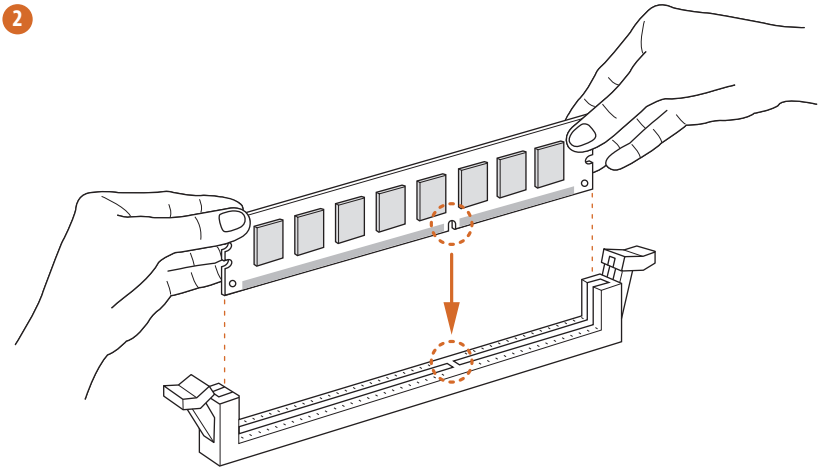

3

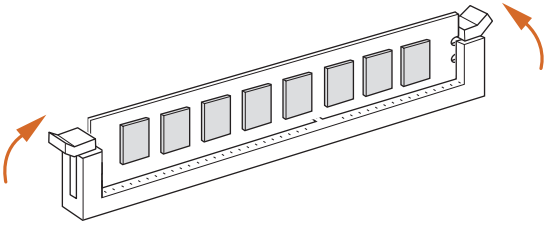

2.4 Connecting the Front Panel Header

1

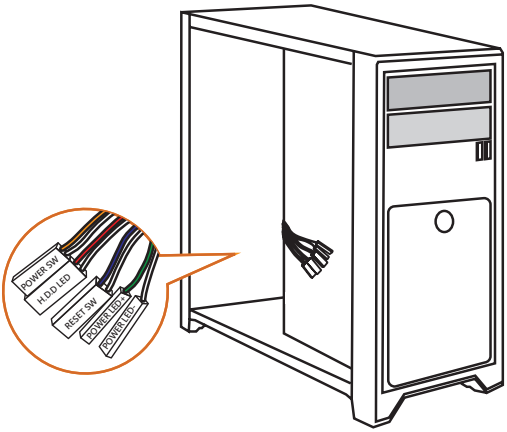

2

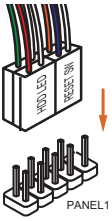

System Panel Header

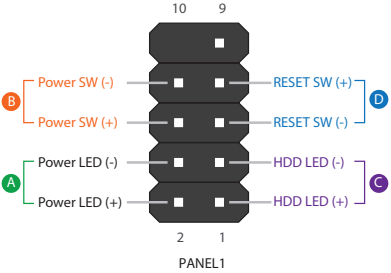

Front Panel Wires

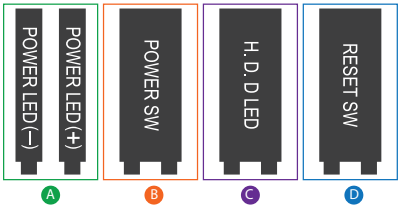

English

2.5 Installing the Motherboard

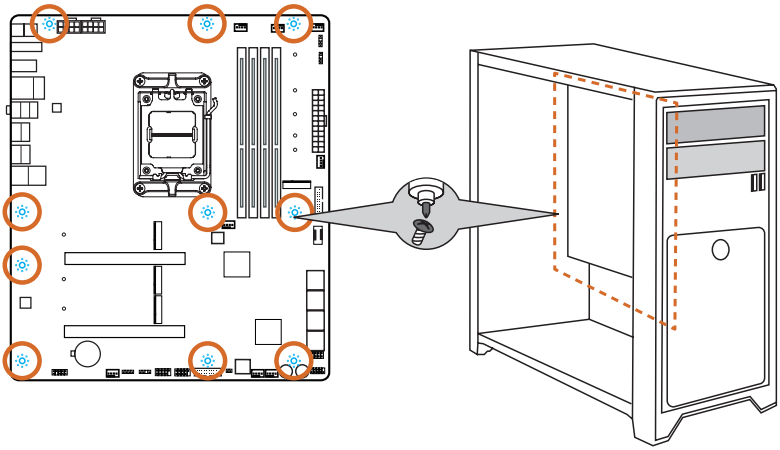

2.6 Installing SATA Drives

1

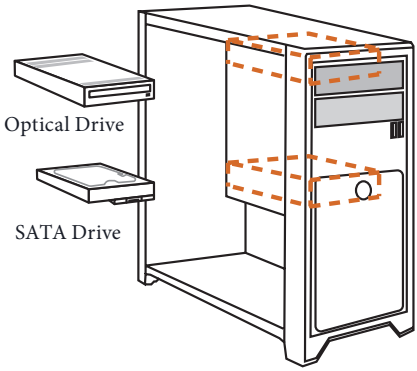

2

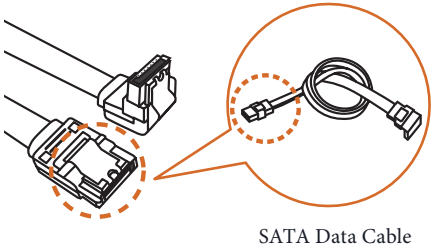

3

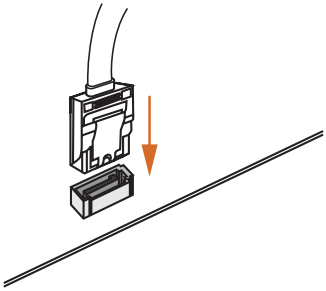

4

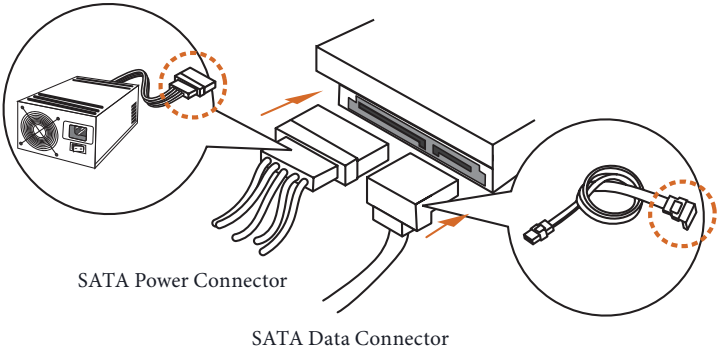

2.7 Installing a Graphics Card

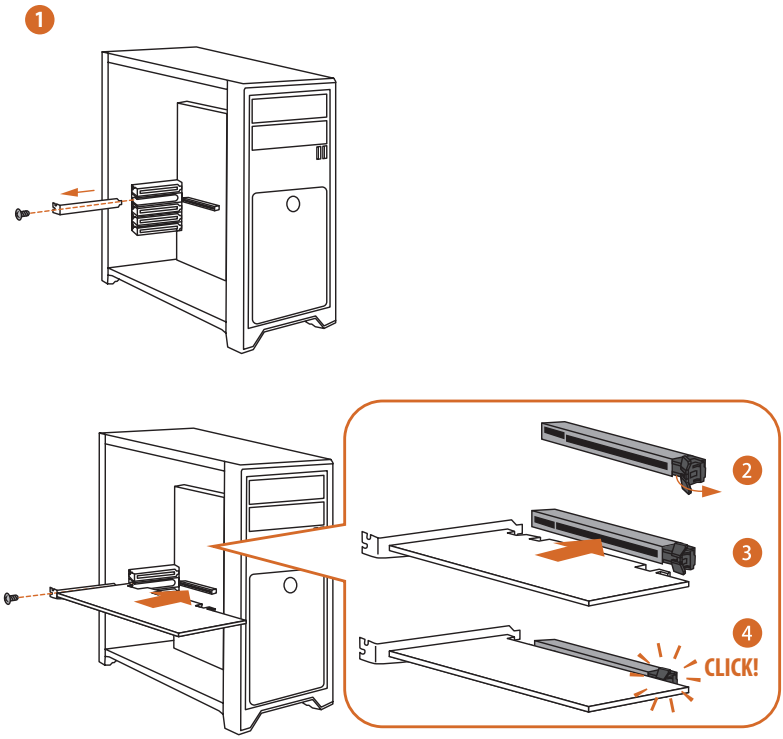

Expansion Slots (PCIe Slots)

There are 2 PCI Express slots on the motherboard.

Before installing an expansion card, please make sure that the power supply is switched off or the power cord is unplugged. Please read the documentation of the expansion card and make necessary hardware settings for the card before you start the installation.

PCIe slots:

PCIE1 (PCIe 5.0 x16 slot) is used for PCIe x16 lane width graphics cards.
PCIE2 (PCIe 5.0 x16 slot) is used for PCIe x8 lane width graphics cards.

PCIe Slot Configurations

	PCIE1	PCIE2
Single Graphics Card	Gen5x16	N/A
Two Graphics Cards in CrossFire™ Mode	Gen5x8	Gen5x8

For a better thermal environment, please connect a chassis fan to the motherboard's chassis fan connector (CHA_FAN1~6/WP) when using multiple graphics cards.

English

2.8 Connecting Peripheral Devices

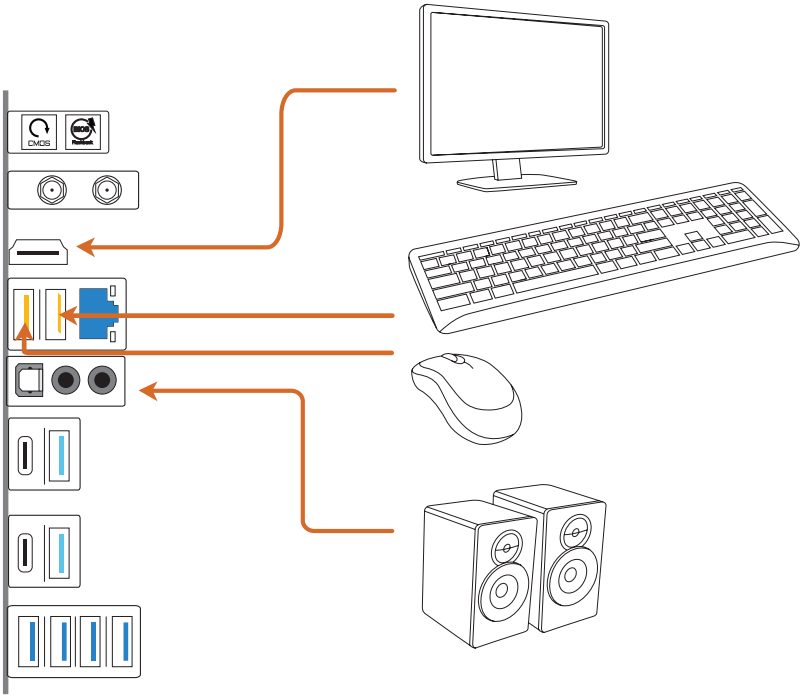

2.9 Connecting the Power Connectors

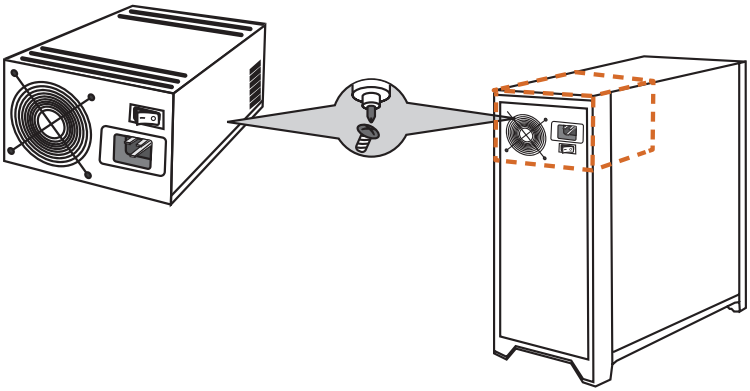

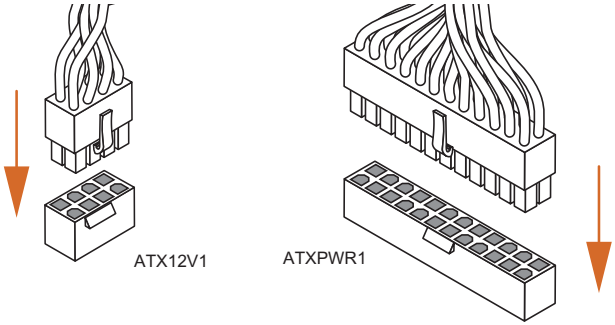

2.10 Power On

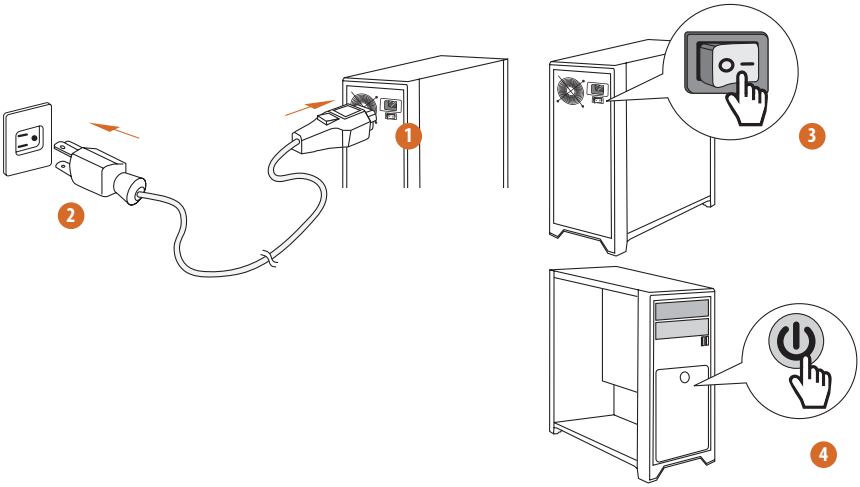

2.11 Jumpers Setup

The illustration shows how jumpers are setup. When the jumper cap is placed on the pins, the jumper is "Short". If no jumper cap is placed on the pins, the jumper is "Open".

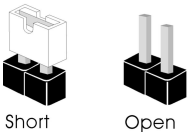

Clear CMOS Jumper
(CLRCMOS1) (see p.7, No. 25)

CLRCMOS1 allows you to clear the data in CMOS. The data in CMOS includes system setup information such as system password, date, time, and system setup parameters. To clear and reset the system parameters to default setup, please turn off the computer and unplug the power cord, then use a jumper cap to short the pins on CLRCMOS1 for 3 seconds. Please remember to remove the jumper cap after clearing the CMOS. If you need to clear the CMOS when you just finish updating the BIOS, you must boot up the system first, and then shut it down before you do the clear-CMOS action.

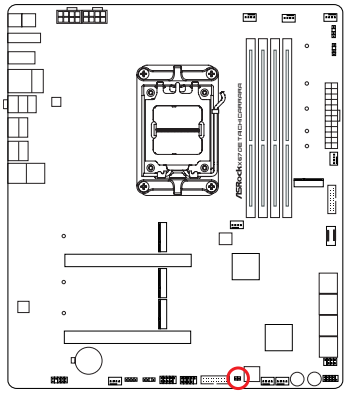

CLRCMOS1

2-pin Jumper

Short: Clear CMOS
Open: Default

English

2.12 Onboard Headers and Connectors

Onboard headers and connectors are NOT jumpers. Do NOT place jumper caps over these headers and connectors. Placing jumper caps over the headers and connectors will cause permanent damage to the motherboard.

System Panel Header
(9-pin PANEL1) (see p.7, No. 20)

Connect the power button, reset button and system status indicator on the chassis to this header according to the pin assignments below. Note the positive and negative pins before connecting the cables.

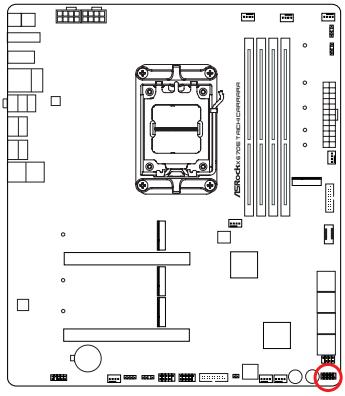

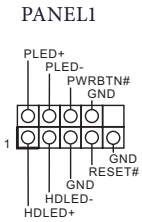

PWRBTN (Power Button):
Connect to the power button on the chassis front panel. You may configure the way to turn off your system using the power button.

RESET (Reset Button):
Connect to the reset button on the chassis front panel. Press the reset button to restart the computer if the computer freezes and fails to perform a normal restart.

PLED (System Power LED):
Connect to the power status indicator on the chassis front panel. The LED is on when the system is operating. The LED keeps blinking when the system is in S1/S3 sleep state. The LED is off when the system is in S4 sleep state or powered off (S5).

HDLED (Hard Drive Activity LED):
Connect to the hard drive activity LED on the chassis front panel. The LED is on when the hard drive is reading or writing data.

The front panel design may differ by chassis. A front panel module mainly consists of power button, reset button, power LED, hard drive activity LED, speaker and etc. When connecting your chassis front panel module to this header, make sure the wire assignments and the pin assignments are matched correctly.

Power LED and Speaker Header
(7-pin SPK_PLED1) (see p.7, No. 19)

Please connect the chassis power LED and the chassis speaker to this header.

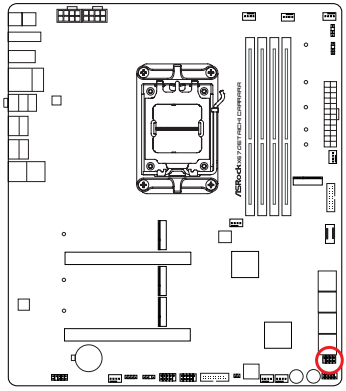

SPK_PLED1

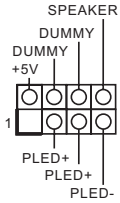

Serial ATA3 Connectors

Right Angle:

(SATA3_1) (see p.7, No. 17)(Lower)

(SATA3_2) (see p.7, No. 17)(Upper)

(SATA3_3) (see p.7, No. 18)(Lower)

(SATA3_4) (see p.7, No. 18)(Upper)

(SATA3_A1) (see p.7, No. 15)(Lower)

(SATA3_A2) (see p.7, No. 15)(Upper)

(SATA3_A3) (see p.7, No. 16)(Lower)

(SATA3_A4) (see p.7, No. 16)(Upper)

These eight SATA3 connectors support SATA data cables for internal storage devices with up to 6.0 Gb/s data transfer rate.

* To minimize the boot time, use AMD SATA ports (SATA3_1~4) for your SSDs.

* If M2_2 is occupied by a SATA-type M.2 device, SATA3_A1 will be disabled.

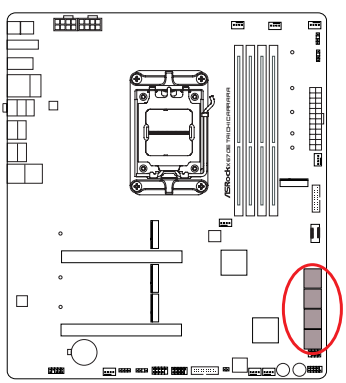

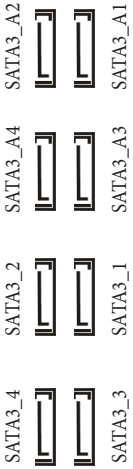

English

USB 2.0 Headers

(9-pin USB_1_2) (see p.7, No. 28)

(9-pin USB_3_4) (see p.7, No. 27)

There are two headers on this motherboard. Each USB 2.0 header can support two ports.

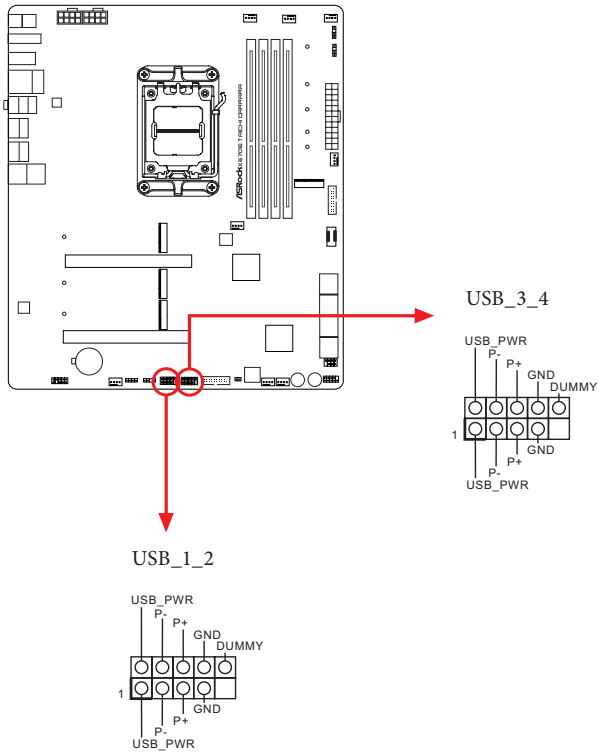

English

USB 3.2 Gen1 Headers
(19-pin USB32_9_10) (see p.7, No. 26)
(19-pin USB32_11_12) (see p.7, No. 12)

There are two headers on this motherboard. Each USB 3.2 Gen1 header can support two ports.

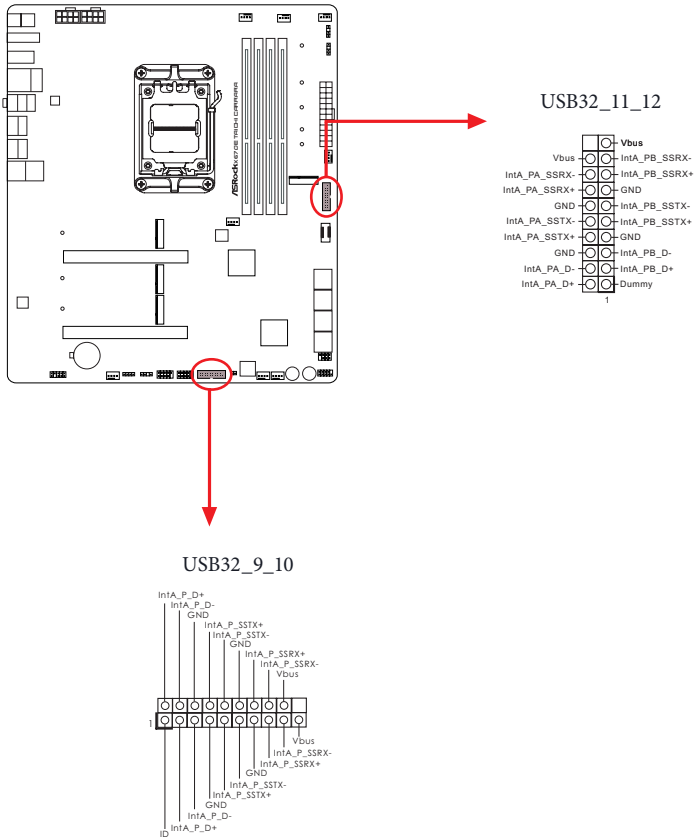

English

Front Panel Type C USB 3.2 Gen2x2 Header
(20-pin USB32_TC_1) (see p.7, No. 13)

There is one Front Panel Type C USB 3.2 Gen2x2 Header on this motherboard. This header is used for connecting a USB 3.2 Gen2x2 module for additional USB 3.2 Gen2x2 ports.

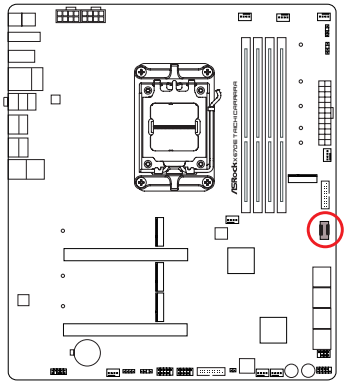

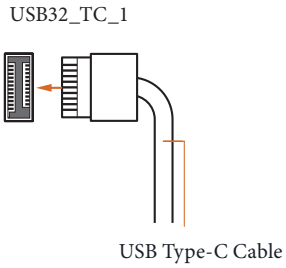

English

Front Panel Audio Header
(9-pin HD_AUDIO1) (see p.7, No. 32)

This header is for connecting audio devices to the front audio panel.

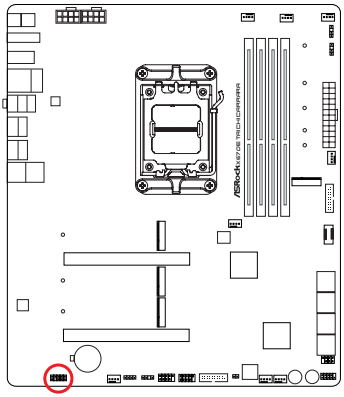

HD_AUDIO1

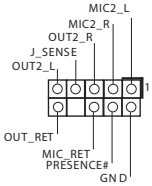

High Definition Audio supports Jack Sensing, but the panel wire on the chassis must support HDA to function correctly. Please follow the instructions in our manual and chassis manual to install your system.

English

Chassis/Water Pump Fan Connectors
(4-pin CHA_FAN1/WP) (see p.7, No. 7)
(4-pin CHA_FAN2/WP) (see p.7, No. 11)
(4-pin CHA_FAN3/WP) (see p.7, No. 23)
(4-pin CHA_FAN4/WP) (see p.7, No. 24)
(4-pin CHA_FAN5/WP) (see p.7, No. 31)
(4-pin CHA_FAN6/WP) (see p.7, No. 14)

This motherboard provides six 4-Pin water cooling chassis fan connectors. If you plan to connect a 3-Pin chassis water cooler fan, please connect it to Pin 1-3.

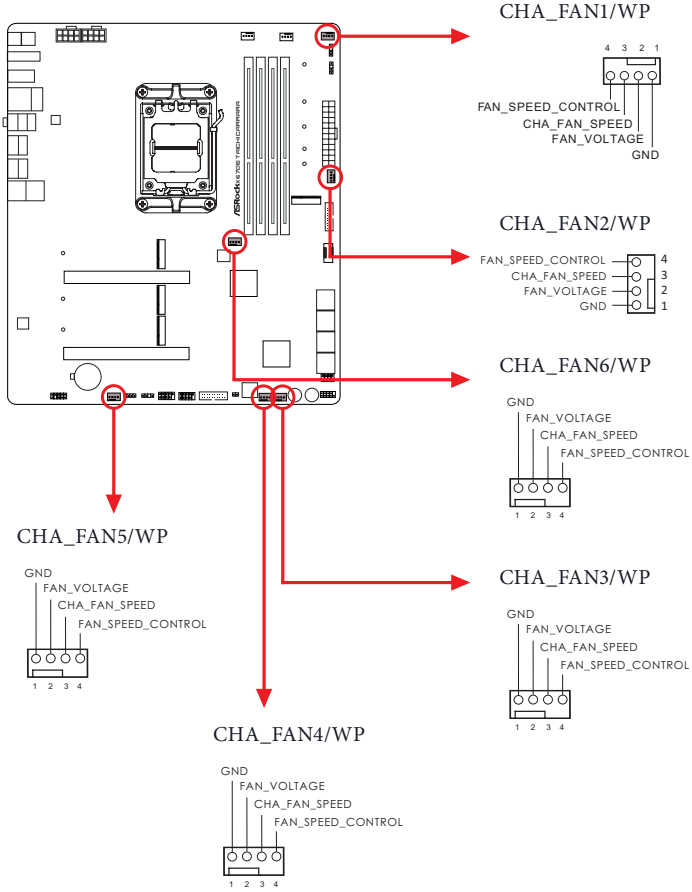

English

CPU Fan Connector
(4-pin CPU_FAN1) (see p.7, No. 3)

This motherboard provides a 4-Pin CPU fan (Quiet Fan) connector. If you plan to connect a 3-Pin CPU fan, please connect it to Pin 1-3.

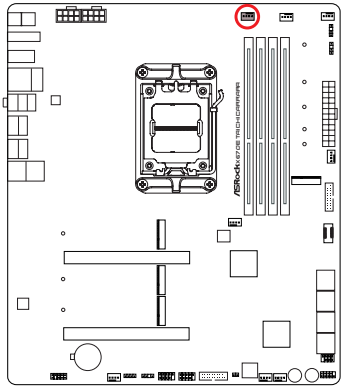

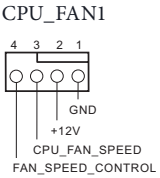

CPU/Water Pump Fan Connector
(4-pin CPU_FAN2/WP_3A) (see p.7, No. 6)

This motherboard provides a 4-Pin water cooling CPU fan connector. If you plan to connect a 3-Pin CPU water cooler fan, please connect it to Pin 1-3.

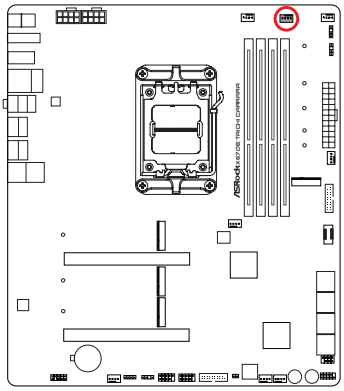

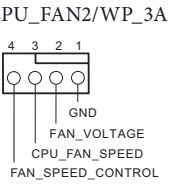

English

ATX Power Connector
(24-pin ATXPWR1) (see p.7, No. 10)

This motherboard provides a 24-pin ATX power connector. To use a 20-pin ATX power supply, please plug it along Pin 1 and Pin 13.

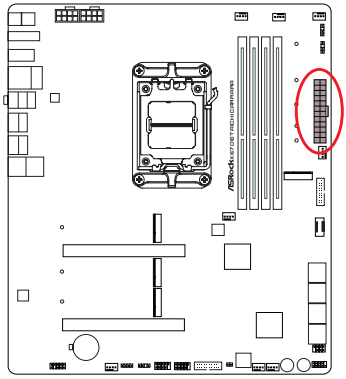

ATXPWR1

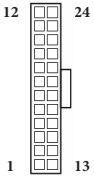

ATX 12V Power Connectors
(8-pin ATX12V1) (see p.7, No. 1)
(8-pin ATX12V2) (see p.7, No. 2)

This motherboard provides two 8-pin ATX 12V power connectors. To use a 4-pin ATX power supply, please plug it along Pin 1 and Pin 5.
*Connecting an ATX 12V 8-pin cable to ATX12V2 is optional.
***Warning: Please make sure that the power cable connected is for the CPU and not the graphics card. Do not plug the PCIe power cable to this connector.**

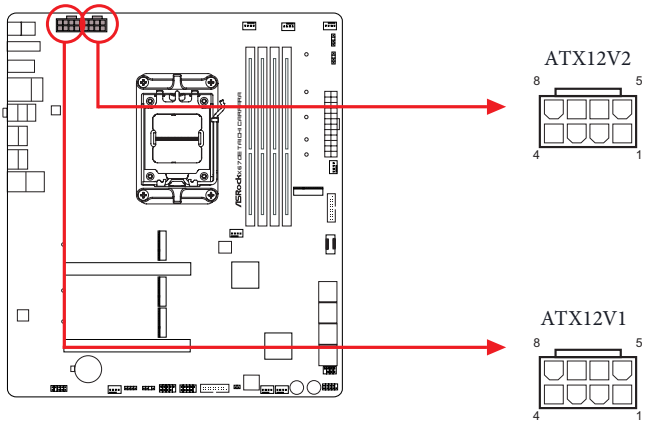

RGB LED Header
(4-pin RGB_LED1) (see p.7, No. 30)
This RGB header is used to connect RGB LED extension cable which allow users to choose from various LED lighting effects.
Caution: Never install the RGB LED cable in the wrong orientation; otherwise, the cable may be damaged.

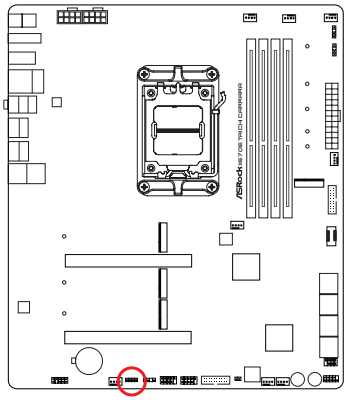

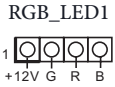

Connect your RGB LED strip to the **RGB LED Header (RGB_LED1)** on the motherboard.

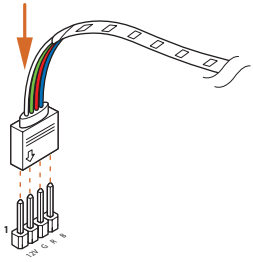

1. *Never install the RGB LED cable in the wrong orientation; otherwise, the cable may be damaged.*
2. *Before installing or removing your RGB LED cable, please power off your system and unplug the power cord from the power supply. Failure to do so may cause damages to motherboard components.*

1. *Please note that the RGB LED strips do not come with the package.*
2. *The RGB LED header supports standard 5050 RGB LED strip (12V/G/R/B), with a maximum power rating of 3A (12V) and length within 2 meters.*

English

Addressable LED Headers
(3-pin ADDR_LED1) (see p.7, No. 29)
(3-pin ADDR_LED2) (see p.7, No. 9)
(3-pin ADDR_LED3) (see p.7, No. 8)
These headers are used to connect Addressable LED extension cables which allow users to choose from various LED lighting effects.
Caution: Never install the Addressable LED cable in the wrong orientation; otherwise, the cable may be damaged.

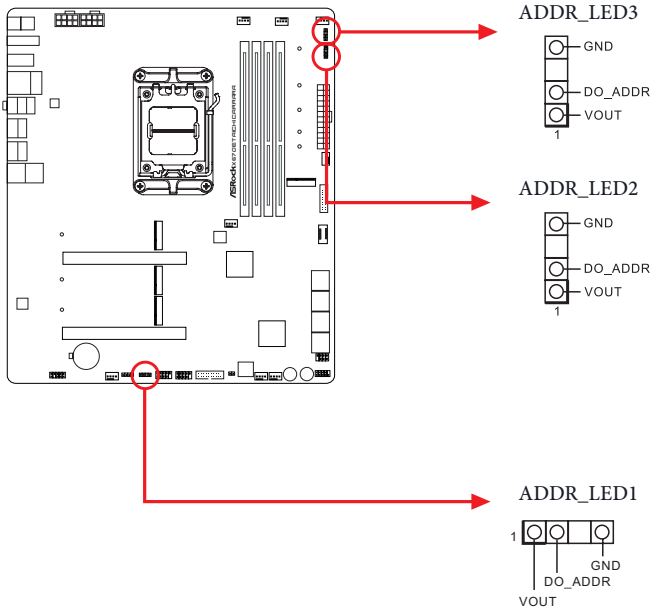

Connect your Addressable RGB LED strips to the **Addressable LED Headers (ADDR_LED1 / ADDR_LED2 / ADDR_LED3)** on the motherboard.

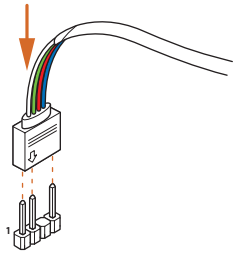

English

1. *Never install the RGB LED cable in the wrong orientation; otherwise, the cable may be damaged.*
2. *Before installing or removing your RGB LED cable, please power off your system and unplug the power cord from the power supply. Failure to do so may cause damages to motherboard components.*

1. *Please note that the RGB LED strips do not come with the package.*
2. *The RGB LED header supports WS2812B addressable RGB LED strip (5V/Data/GND), with a maximum power rating of 3A (5V) and length within 2 meters.*

2.13 Smart Switches

The motherboard has four smart switches: Power Button, Reset Button, Clear CMOS Buttons and BIOS Flashback Button, allowing users to quickly turn on/off the system, reset the system, clear the CMOS values or flash the BIOS.

Power Button
(PWRBTN1) (see p.7, No. 21)

Power Button allows users to quickly turn on/off the system.

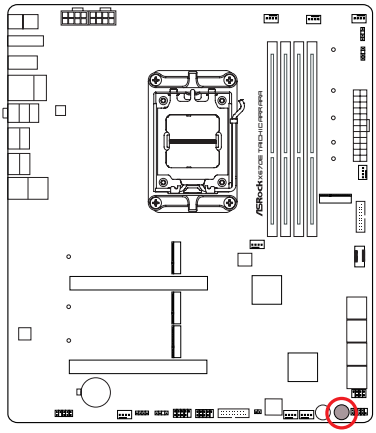

PWRBTN1

Reset Button
(RSTBTN1) (see p.7, No. 22)

Reset Button allows users to quickly reset the system.

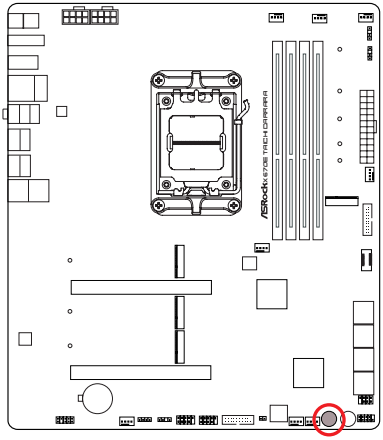

RSTBTN1

English

Clear CMOS Button

(CLRCMOS) (see p.9, No. 15)

Clear CMOS Button allows users to quickly clear the CMOS values.

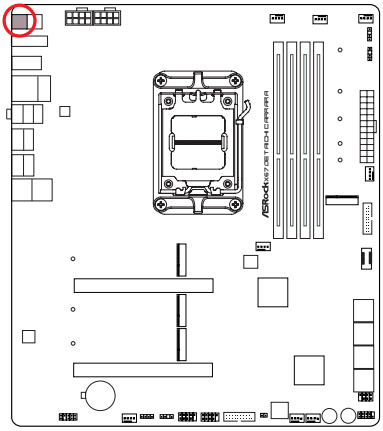

CLRCMOS

This function is workable only when you power off your computer and unplug the power supply.

BIOS Flashback Button
(BIOS_FB) (see p.9, No. 1)
BIOS Flashback Button allows users to flash the BIOS.

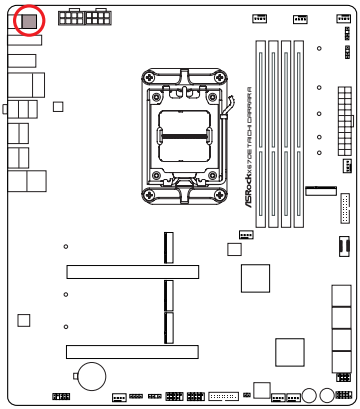

BIOS_FB

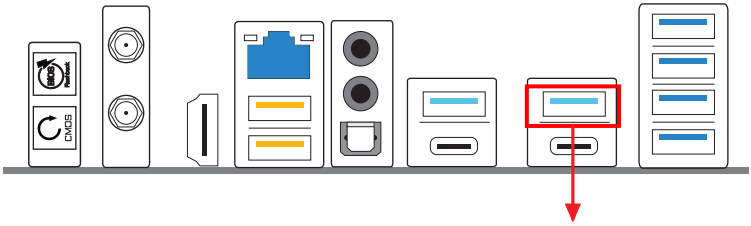

USB BIOS Flashback port

English

ASRock BIOS Flashback feature allows you to update BIOS without powering on the system, even without CPU.

Before using the BIOS Flashback function, please suspend BitLocker and any encryption or security relying on the TPM. Make sure that you have already stored and backup-ed the recovery key. If the recovery key is missing while encryption is active, the data will stay encrypted and the system will not boot into the operating system. It is recommended to disable fTPM before updating the BIOS. Otherwise an unpredictable failure may occur.

To use the USB BIOS Flashback function, Please follow the steps below.

1. Download the latest BIOS file from ASRock's website : http://www.asrock.com.
2. Copy the BIOS file to your USB flash drive. Please make sure the file system of your USB flash drive must be FAT32.
3. Extract BIOS file from the zip file.
4. Rename the file to "**creative.rom**" and save it to the root directory of X: USB flash drive.
5. Plug the 24 pin power connector to the motherboard. Then turn on the power supply's AC switch.
   *There is no need to power on the system.
6. Then plug your USB drive to the USB BIOS Flashback port.
7. Press the BIOS Flashback Switch for about three seconds. Then the LED starts to blink.
8. Wait until the LED stops blinking, indicating that BIOS flashing has been completed.
   *If the LED light turns solid green, this means that the BIOS Flashback is not operating properly. Please make sure that you plug the USB drive to the USB BIOS Flashback port.
   **If the LED does not light up at all then please disconnect power from the system and remove/disconnect the CMOS battery from the motherboard for several minutes. Reconnect power and battery and try again.

2.14 Dr. Debug

Dr. Debug is used to provide code information, which makes troubleshooting even easier. Please see the diagrams below for reading the Dr. Debug codes.

Code	Description
0x10	PEI_CORE_STARTED
0x11	PEI_CAR_CPU_INIT
0x15	PEI_CAR_NB_INIT
0x19	PEI_CAR_SB_INIT
0x31	PEI_MEMORY_INSTALLED
0x32	PEI_CPU_INIT
0x33	PEI_CPU_CACHE_INIT
0x34	PEI_CPU_AP_INIT
0x35	PEI_CPU_BSP_SELECT
0x36	PEI_CPU_SMM_INIT
0x37	PEI_MEM_NB_INIT
0x3B	PEI_MEM_SB_INIT
0x4F	PEI_DXE_IPL_STARTED
0x60	DXE_CORE_STARTED
0x61	DXE_NVRAM_INIT
0x62	DXE_SBRUN_INIT

0x63	DXE_CPU_INIT
0x68	DXE_NB_HB_INIT
0x69	DXE_NB_INIT
0x6A	DXE_NB_SMM_INIT
0x70	DXE_SB_INIT
0x71	DXE_SB_SMM_INIT
0x72	DXE_SB_DEVICES_INIT
0x78	DXE_ACPI_INIT
0x79	DXE_CSM_INIT
0x90	DXE_BDS_STARTED
0x91	DXE_BDS_CONNECT_DRIVERS
0x92	DXE_PCI_BUS_BEGIN
0x93	DXE_PCI_BUS_HPC_INIT
0x94	DXE_PCI_BUS_ENUM
0x95	DXE_PCI_BUS_REQUEST_RESOURCES
0x96	DXE_PCI_BUS_ASSIGN_RESOURCES
0x97	DXE_CON_OUT_CONNECT
0x98	DXE_CON_IN_CONNECT

0x99	DXE_SIO_INIT
0x9A	DXE_USB_BEGIN
0x9B	DXE_USB_RESET
0x9C	DXE_USB_DETECT
0x9D	DXE_USB_ENABLE
0xA0	DXE_IDE_BEGIN
0xA1	DXE_IDE_RESET
0xA2	DXE_IDE_DETECT
0xA3	DXE_IDE_ENABLE
0xA4	DXE_SCSI_BEGIN
0xA5	DXE_SCSI_RESET
0xA6	DXE_SCSI_DETECT
0xA7	DXE_SCSI_ENABLE
0xA8	DXE_SETUP_VERIFYING_PASSWORD
0xA9	DXE_SETUP_START
0xAB	DXE_SETUP_INPUT_WAIT
0xAD	DXE_READY_TO_BOOT
0xAE	DXE_LEGACY_BOOT

0xAF	DXE_EXIT_BOOT_SERVICES
0xB0	RT_SET_VIRTUAL_ADDRESS_MAP_BEGIN
0xB1	RT_SET_VIRTUAL_ADDRESS_MAP_END
0xB2	DXE_LEGACY_OPROM_INIT
0xB3	DXE_RESET_SYSTEM
0xB4	DXE_USB_HOTPLUG
0xB5	DXE_PCI_BUS_HOTPLUG
0xB6	DXE_NVRAM_CLEANUP
0xB7	DXE_CONFIGURATION_RESET
0xF0	PEI_RECOVERY_AUTO
0xF1	PEI_RECOVERY_USER
0xF2	PEI_RECOVERY_STARTED
0xF3	PEI_RECOVERY_CAPSULE_FOUND
0xF4	PEI_RECOVERY_CAPSULE_LOADED
0xE0	PEI_S3_STARTED
0xE1	PEI_S3_BOOT_SCRIPT
0xE2	PEI_S3_VIDEO_REPOST

0xE3	PEI_S3_OS_WAKE
0x50	PEI_MEMORY_INVALID_TYPE
0x53	PEI_MEMORY_NOT_DETECTED
0x55	PEI_MEMORY_NOT_INSTALLED
0x57	PEI_CPU_MISMATCH
0x58	PEI_CPU_SELF_TEST_FAILED
0x59	PEI_CPU_NO_MICROCODE
0x5A	PEI_CPU_ERROR
0x5B	PEI_RESET_NOT_AVAILABLE
0xD0	DXE_CPU_ERROR
0xD1	DXE_NB_ERROR
0xD2	DXE_SB_ERROR
0xD3	DXE_ARCH_PROTOCOL_NOT_AVAILABLE
0xD4	DXE_PCI_BUS_OUT_OF_RESOURCES
0xD5	DXE_LEGACY_OPROM_NO_SPACE
0xD6	DXE_NO_CON_OUT
0xD7	DXE_NO_CON_IN

0xD8	DXE_INVALID_PASSWORD
0xD9	DXE_BOOT_OPTION_LOAD_ERROR
0xDA	DXE_BOOT_OPTION_FAILED
0xDB	DXE_FLASH_UPDATE_FAILED
0xDC	DXE_RESET_NOT_AVAILABLE
0xE8	PEI_MEMORY_S3_RESUME_FAILED
0xE9	PEI_S3_RESUME_PPI_NOT_FOUND
0xEA	PEI_S3_BOOT_SCRIPT_ERROR
0xEB	PEI_S3_OS_WAKE_ERROR

2.15 M.2 SSD Module Installation Guide (M2_1)

The M.2 is a small size and versatile card edge connector that aims to replace mPCIe and mSATA. The Blazing M.2 Socket (M2_1, Key M) supports type 2280 PCIe Gen5x4 (128 Gb/s) mode.

Installing the M.2 SSD Module

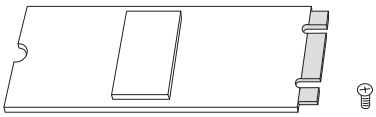

Step 1

Prepare a M.2 SSD module and the screw.

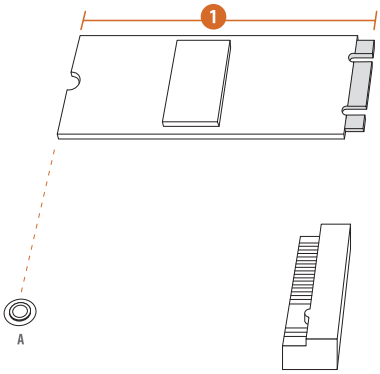

Step 2

Depending on the PCB type and length of your M.2 SSD module, find the corresponding nut location to be used.

No.	1
Nut Location	A
PCB Length	8cm
Module Type	Type2280

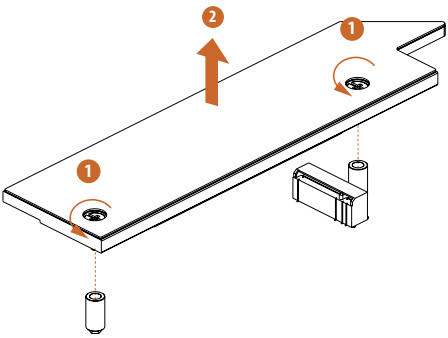

Step 3

Before installing a M.2 SSD module, please loosen the screws to remove the M.2 heatsink.
*Please remove the protective films on the bottom side of the M.2 heatsink before you install a M.2 SSD module.

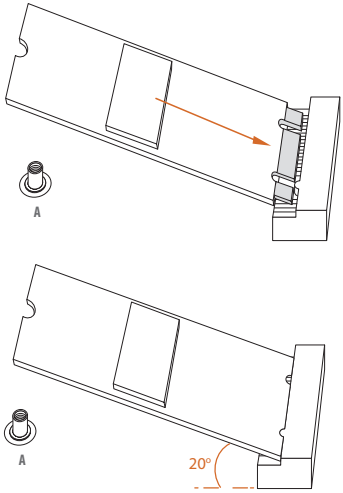

Step 4

Align and gently insert the M.2 SSD module into the M.2 slot. Please be aware that the M.2 SSD module only fits in one orientation.

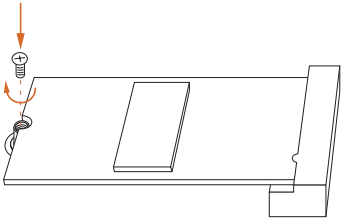

Step 5

Tighten the screw that comes with the package with a screwdriver to secure the module into place.

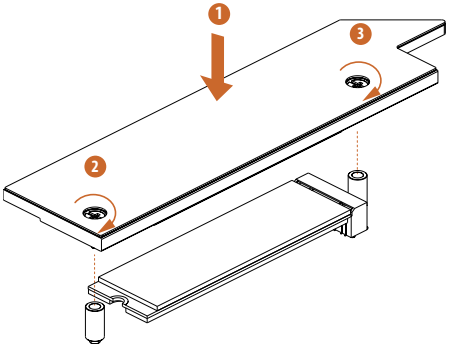

Step 6

Tighten the screw with a screwdriver to secure the M.2 heatsink into place in the order shown. Tighten screw opposite the M.2 connector first (2), and then tighten the one next to the M.2 connector (3).
*Please do not overtighten the screw as this might damage the module and M.2 heatsink.

For the latest updates of M.2 SSD module support list, please visit our website for details:
http://www.asrock.com

Using Blazing M.2 Gen5 Fan Heatsink

Blazing M.2 Gen5 Fan Heatsink is a M.2 SSD heatsink with fan specially designed for PCIe Gen5 SSD to achieve optimal heat dissipation. Follow the steps below to replace the pre-installed M.2 heatsink with Blazing M.2 Gen5 Fan Heatsink that comes with the package.

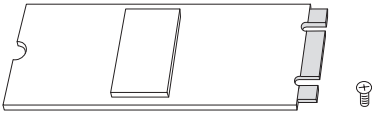

Step 1

Prepare a M.2 SSD module and the screw.

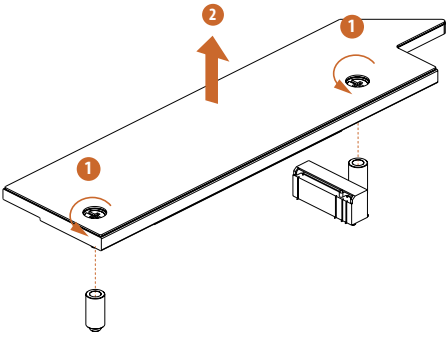

Step 2

Before installing a M.2 SSD module, please loosen the screws to remove the pre-installed M.2 heatsink.

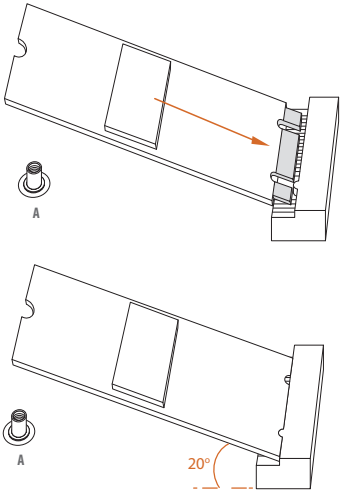

Step 3

Align and gently insert the M.2 SSD module into the M.2 slot. Please be aware that the M.2 SSD module only fits in one orientation.

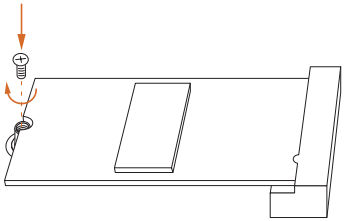

Step 4

Tighten the screw that comes with the package with a screwdriver to secure the module into place.

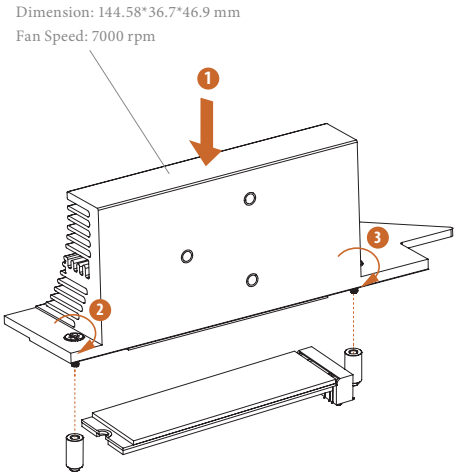

Step 5

Remove the protective films on the bottom side of Blazing M.2 Gen5 Fan Heatsink.

Tighten the screw with a screwdriver to secure Blazing M.2 Gen5 Fan Heatsink into place in the order shown. Tighten screw opposite the M.2 connector first (2), and then tighten the one next to the M.2 connector (3).
*Please do not overtighten the screw as this might damage the module and M.2 heatsink.

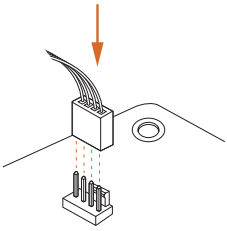

Step 6

Plug the fan cable to a free fan connector on the motherboard.

2.16 M.2 SSD Module Installation Guide (M2_2)

The M.2 is a small size and versatile card edge connector that aims to replace mPCIe and mSATA. The Hyper M.2 Socket (M2_2, Key M) supports type 2230/2242/2260/2280/22110 SATA3 6.0 Gb/s & PCIe Gen4x4 (64 Gb/s) modes.

* If M2_2 is occupied by a SATA-type M.2 device, SATA3_A1 will be disabled.

Installing the M.2 SSD Module

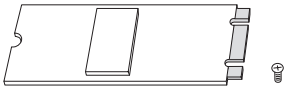

Step 1

Prepare a M.2 SSD module and the screw.

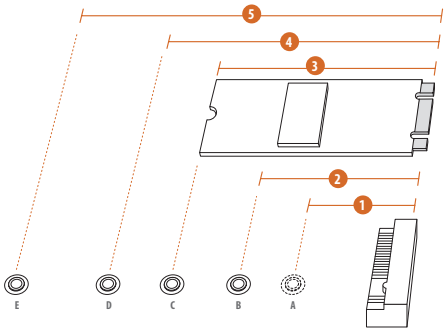

Step 2

Depending on the PCB type and length of your M.2 SSD module, find the corresponding nut location to be used.

No.	1	2	3	4	5
Nut Location	A	B	C	D	E
PCB Length	3cm	4.2cm	6cm	8cm	11cm
Module Type	Type2230	Type 2242	Type2260	Type 2280	Type 22110

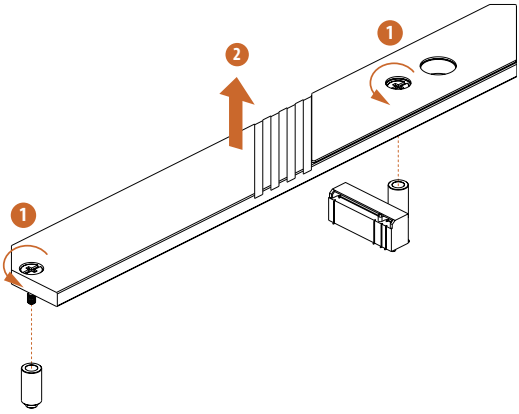

Step 3

Before installing a M.2 SSD module, please loosen the screws to remove the M.2 heatsink.
*Please remove the protective films on the bottom side of the M.2 heatsink before you install a M.2 SSD module.

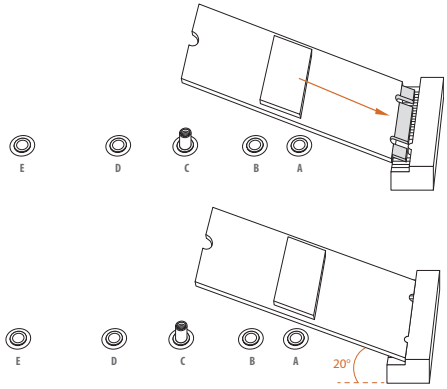

Step 4

Prepare the M.2 standoff that comes with the package. Then hand tighten the standoff into the desired nut location on the motherboard. Align and gently insert the M.2 SSD module into the M.2 slot. Please be aware that the M.2 SSD module only fits in one orientation.

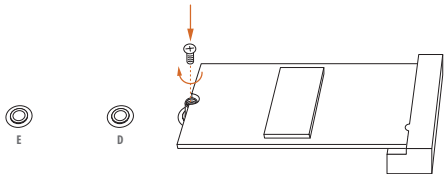

Step 5

Tighten the screw that comes with the package with a screwdriver to secure the module into place.

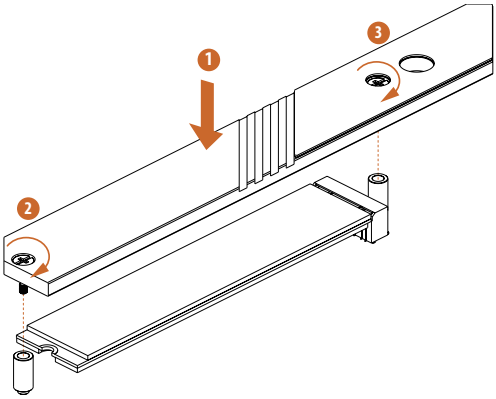

Step 6

Tighten the screw with a screwdriver to secure the M.2 heatsink into place in the order shown. Tighten screw opposite the M.2 connector first (2), and then tighten the one next to the M.2 connector (3).
*Please do not overtighten the screw as this might damage the module and M.2 heatsink.

For the latest updates of M.2 SSD module support list, please visit our website for details: http://www.asrock.com

2.17 M.2 SSD Module Installation Guide (M2_3)

The M.2 is a small size and versatile card edge connector that aims to replace mPCIe and mSATA. The Hyper M.2 Socket (M2_3, Key M) supports type 2280 PCIe Gen4x4 (64 Gb/s) mode.

Installing the M.2 SSD Module

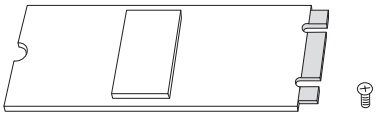

Step 1

Prepare a M.2 SSD module and the screw.

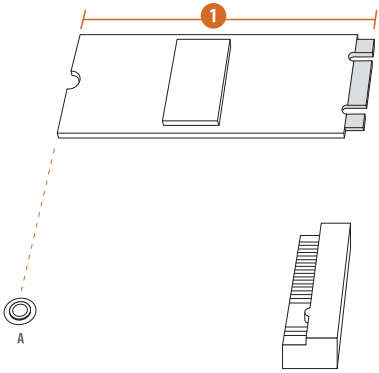

Step 2

Depending on the PCB type and length of your M.2 SSD module, find the corresponding nut location to be used.

No.	1
Nut Location	A
PCB Length	8cm
Module Type	Type2280

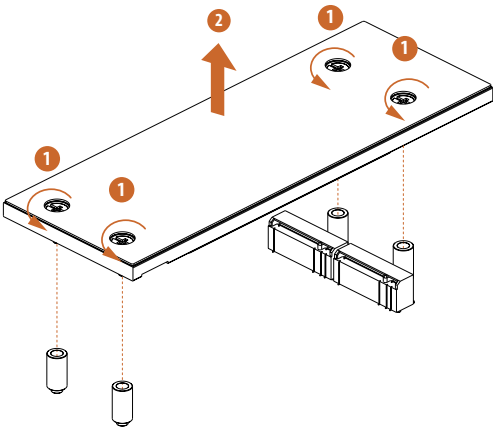

Step 3

Before installing a M.2 SSD module, please loosen the screws to remove the M.2 heatsink.
*Please remove the protective films on the bottom side of the M.2 heatsink before you install a M.2 SSD module.

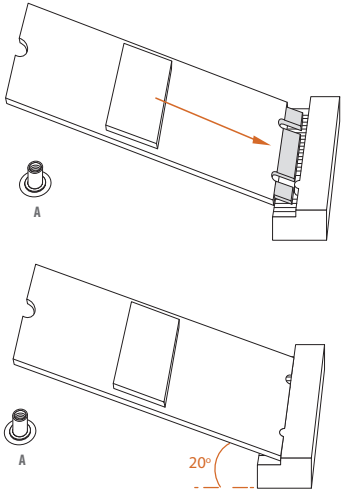

Step 4

Align and gently insert the M.2 SSD module into the M.2 slot. Please be aware that the M.2 SSD module only fits in one orientation.

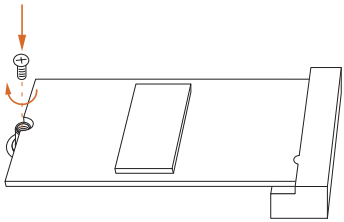

Step 5

Tighten the screw that comes with the package with a screwdriver to secure the module into place.

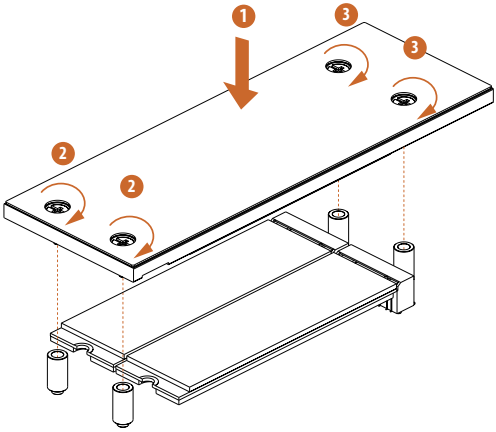

Step 6

Tighten the screws with a screwdriver to secure the M.2 heatsink into place in the order shown. Tighten screws opposite the M.2 connector first (2), and then tighten the ones next to the M.2 connector (3).
*Please do not overtighten the screw as this might damage the module and M.2 heatsink.

For the latest updates of M.2 SSD module support list, please visit our website for details:
http://www.asrock.com

2.18 M.2 SSD Module Installation Guide (M2_4)

The M.2 is a small size and versatile card edge connector that aims to replace mPCIe and mSATA. The Hyper M.2 Socket (M2_4, Key M) supports type 2280 PCIe Gen4x4 (64 Gb/s) mode.

Installing the M.2 SSD Module

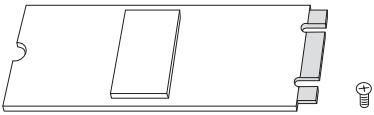

Step 1

Prepare a M.2 SSD module and the screw.

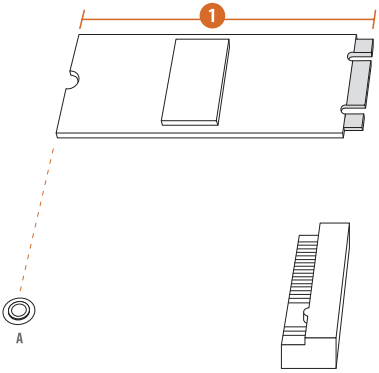

Step 2

Depending on the PCB type and length of your M.2 SSD module, find the corresponding nut location to be used.

No.	1
Nut Location	A
PCB Length	8cm
Module Type	Type2280

English

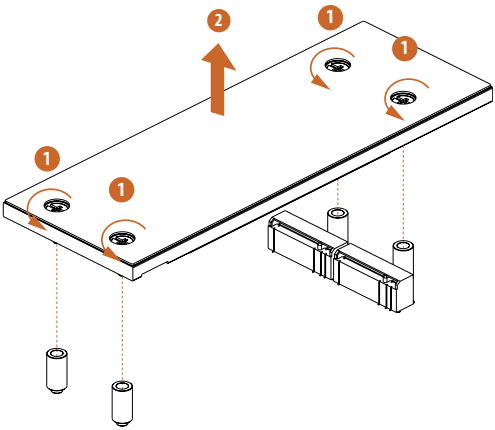

Step 3

Before installing a M.2 SSD module, please loosen the screws to remove the M.2 heatsink.
*Please remove the protective films on the bottom side of the M.2 heatsink before you install a M.2 SSD module.

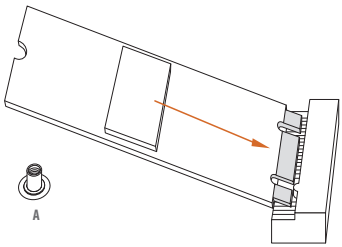

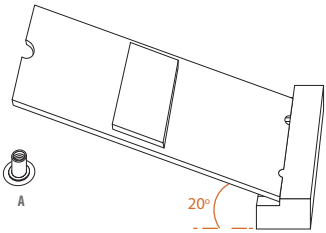

Step 4

Align and gently insert the M.2 SSD module into the M.2 slot. Please be aware that the M.2 SSD module only fits in one orientation.

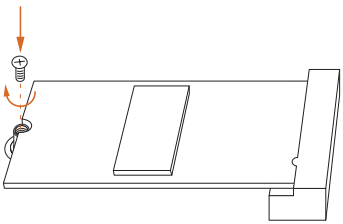

Step 5

Tighten the screw that comes with the package with a screwdriver to secure the module into place.

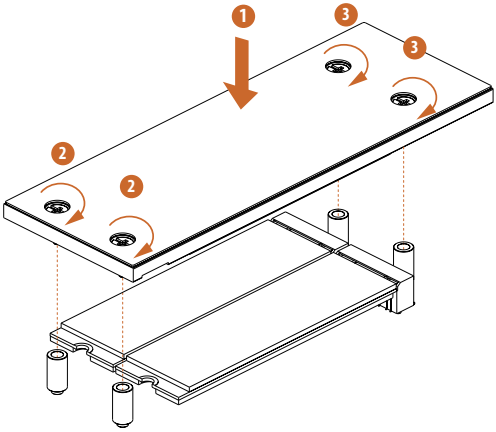

Step 6

Tighten the screws with a screwdriver to secure the M.2 heatsink into place in the order shown. Tighten screws opposite the M.2 connector first (2), and then tighten the ones next to the M.2 connector (3).
*Please do not overtighten the screw as this might damage the module and M.2 heatsink.

For the latest updates of M.2 SSD module support list, please visit our website for details: http://www.asrock.com

Version 1.0
Published August 2022

Copyright©2022 ASRock INC. All rights reserved.

Copyright Notice:

No part of this documentation may be reproduced, transcribed, transmitted, or translated in any language, in any form or by any means, except duplication of documentation by the purchaser for backup purpose, without written consent of ASRock Inc.

Products and corporate names appearing in this documentation may or may not be registered trademarks or copyrights of their respective companies, and are used only for identification or explanation and to the owners' benefit, without intent to infringe.

Disclaimer:

Specifications and information contained in this documentation are furnished for informational use only and subject to change without notice, and should not be constructed as a commitment by ASRock. ASRock assumes no responsibility for any errors or omissions that may appear in this documentation.

With respect to the contents of this documentation, ASRock does not provide warranty of any kind, either expressed or implied, including but not limited to the implied warranties or conditions of merchantability or fitness for a particular purpose.

In no event shall ASRock, its directors, officers, employees, or agents be liable for any indirect, special, incidental, or consequential damages (including damages for loss of profits, loss of business, loss of data, interruption of business and the like), even if ASRock has been advised of the possibility of such damages arising from any defect or error in the documentation or product.

This device complies with Part 15 of the FCC Rules. Operation is subject to the following two conditions:

(1) this device may not cause harmful interference, and
(2) this device must accept any interference received, including interference that may cause undesired operation.

This equipment has been tested and found to comply with the limits for a Class B digital device, pursuant to part 15 of the FCC Rules. These limits are designed to provide reasonable protection against harmful interference in a residential installation. This equipment generates, uses and can radiate radio frequency energy and, if not installed and used in accordance with the instructions, may cause harmful interference to radio communications. However, there is no guarantee that interference will not occur in a particular installation. If this equipment does cause harmful interference to radio or television reception, which can be determined by turning the equipment off and on, the user is encouraged to try to correct the interference by one or more of the following measures:

- Reorient or relocate the receiving antenna.
- Increase the separation between the equipment and receiver.
- Connect the equipment into an outlet on a circuit different from that to which the receiver is connected.
- Consult the dealer or an experienced radio/TV technician for help.

The terms HDMI® and HDMI High-Definition Multimedia Interface, and the HDMI logo are trademarks or registered trademarks of HDMI Licensing LLC in the United States and other countries.

HIGH-DEFINITION MULTIMEDIA INTERFACE

WARNING

THIS PRODUCT CONTAINS A BUTTOON BATTERY
If swallowed, a button battery can cause serious injury or death.
Please keep batteries out of sight or reach of children.

CALIFORNIA, USA ONLY

The Lithium battery adopted on this motherboard contains Perchlorate, a toxic substance controlled in Perchlorate Best Management Practices (BMP) regulations passed by the California Legislature. When you discard the Lithium battery in California, USA, please follow the related regulations in advance.

"Perchlorate Material-special handling may apply, see www.dtsc.ca.gov/hazardouswaste/perchlorate"

AUSTRALIA ONLY

Our goods come with guarantees that cannot be excluded under the Australian Consumer Law. You are entitled to a replacement or refund for a major failure and compensation for any other reasonably foreseeable loss or damage caused by our goods. You are also entitled to have the goods repaired or replaced if the goods fail to be of acceptable quality and the failure does not amount to a major failure. If you require assistance please call ASRock Tel : +886-2-28965588 ext.123 (Standard International call charges apply)

ASRock INC. hereby declares that this device is in compliance with the essential requirements and other relevant provisions of related UKCA Directives. Full text of UKCA declaration of conformity is available at: http://www.asrock.com

ASRock INC. hereby declares that this device is in compliance with the essential requirements and other relevant provisions of related Directives. Full text of EU declaration of conformity is available at: http://www.asrock.com

ASRock follows the green design concept to design and manufacture our products, and makes sure that each stage of the product life cycle of ASRock product is in line with global environmental regulations. In addition, ASRock disclose the relevant information based on regulation requirements.

Please refer to https://www.asrock.com/general/about.asp?cat=Responsibility for information disclosure based on regulation requirements ASRock is complied with.

DO NOT throw the motherboard in municipal waste. This product has been designed to enable proper reuse of parts and recycling. This symbol of the crossed out wheeled bin indicates that the product (electrical and electronic equipment) should not be placed in municipal waste. Check local regulations for disposal of electronic products.

CE Warning

This device complies with directive 2014/53/EU issued by the Commision of the European Community.

This equipment complies with EU radiation exposure limits set forth for an uncontrolled environment.
This equipment should be installed and operated with minimum distance 20cm between the radiator & your body.

Operations in the 5.15-5.35GHz band are restricted to indoor usage only.

	AT	BE	BG	CH	CY	CZ	DE
	DK	EE	EL	ES	FI	FR	HR
	HU	IE	IS	IT	LI	LT	LU
	LV	MT	NL	NO	PL	PT	RO
	SE	SI	SK	TR			

Radio transmit power per transceiver type

Function	Frequency	Maximum Output Power (EIRP)
WiFi	2400-2483.5 MHz	18.5 + / -1.5 dbm
	5150-5250 MHz	21.5 + / -1.5 dbm
	5250-5350 MHz	18.5 + / -1.5 dbm (no TPC) 21.5 + / -1.5 dbm (TPC)
	5470-5725 MHz	25.5 + / -1.5 dbm (no TPC) 28.5 + / -1.5 dbm (TPC)
Bluetooth	2400-2483.5 MHz	8.5 + / -1.5 dbm

ASRock Incorporation
Contains Wi-Fi 6E module with Bluetooth

Intel® Wi-Fi 6E AX210
Model: AX210NGW

FCC ID : PD9AX210NG

IC : 1000M-AX210NG

R 003-220254
T D220163003

CCAH20Y10130T8

5.15~5.35/6GHz indoor use only

ASRock Incorporation
Contains Wi-Fi 6E module with Bluetooth

Intel® Wi-Fi 6E AX211
Model: AX211NGW

FCC ID : PD9AX211NG

IC : 1000M-AX211NG

R 003-220256
T D220165003

CCAH21Y10880T7

5.15~5.35/6GHz indoor use only