Version 1.0
Published October 2018
Copyright©2018 ASRock INC. All rights reserved.

Copyright Notice:

No part of this documentation may be reproduced, transcribed, transmitted, or translated in any language, in any form or by any means, except duplication of documentation by the purchaser for backup purpose, without written consent of ASRock Inc.

Products and corporate names appearing in this documentation may or may not be registered trademarks or copyrights of their respective companies, and are used only for identification or explanation and to the owners' benefit, without intent to infringe.

Disclaimer:

Specifications and information contained in this documentation are furnished for informational use only and subject to change without notice, and should not be constructed as a commitment by ASRock. ASRock assumes no responsibility for any errors or omissions that may appear in this documentation.

With respect to the contents of this documentation, ASRock does not provide warranty of any kind, either expressed or implied, including but not limited to the implied warranties or conditions of merchantability or fitness for a particular purpose.

In no event shall ASRock, its directors, officers, employees, or agents be liable for any indirect, special, incidental, or consequential damages (including damages for loss of profits, loss of business, loss of data, interruption of business and the like), even if ASRock has been advised of the possibility of such damages arising from any defect or error in the documentation or product.

This device complies with Part 15 of the FCC Rules. Operation is subject to the following two conditions:
(1) this device may not cause harmful interference, and
(2) this device must accept any interference received, including interference that may cause undesired operation.

CALIFORNIA, USA ONLY

The Lithium battery adopted on this motherboard contains Perchlorate, a toxic substance controlled in Perchlorate Best Management Practices (BMP) regulations passed by the California Legislature. When you discard the Lithium battery in California, USA, please follow the related regulations in advance.
"Perchlorate Material-special handling may apply, see www.dtsc.ca.gov/hazardouswaste/perchlorate"

ASRock Website: http://www.asrock.com

AUSTRALIA ONLY

Our goods come with guarantees that cannot be excluded under the Australian Consumer Law. You are entitled to a replacement or refund for a major failure and compensation for any other reasonably foreseeable loss or damage caused by our goods. You are also entitled to have the goods repaired or replaced if the goods fail to be of acceptable quality and the failure does not amount to a major failure. If you require assistance please call ASRock Tel : +886-2-28965588 ext.123 (Standard International call charges apply)

The terms HDMI® and HDMI High-Definition Multimedia Interface, and the HDMI logo are trademarks or registered trademarks of HDMI Licensing LLC in the United States and other countries.

HDMI®
HIGH-DEFINITION MULTIMEDIA INTERFACE

CE Warning

This device complies with directive 2014/53/EU issued by the Commision of the European Community.

This equipment complies with EU radiation exposure limits set forth for an uncontrolled environment.
This equipment should be installed and operated with minimum distance 20cm between the radiator & your body.

Operations in the 5.15-5.35GHz band are restricted to indoor usage only.

	AT	BE	BG	CH	CY	CZ	DE
	DK	EE	EL	ES	FI	FR	HR
	HU	IE	IS	IT	LI	LT	LU
	LV	MT	NL	NO	PL	PT	RO
	SE	SI	SK	TR	UK		

Radio transmit power per transceiver type

Function	Frequency	Maximum Output Power (EIRP)
WiFi	2400-2483.5 MHz	18.5 + / -1.5 dbm
	5150-5250 MHz	21.5 + / -1.5 dbm
	5250-5350 MHz	18.5 + / -1.5 dbm (no TPC) 21.5 + / -1.5 dbm (TPC)
	5470-5725 MHz	25.5 + / -1.5 dbm (no TPC) 28.5 + / -1.5 dbm (TPC)
Bluetooth	2400-2483.5 MHz	8.5 + / -1.5 dbm

Motherboard Layout

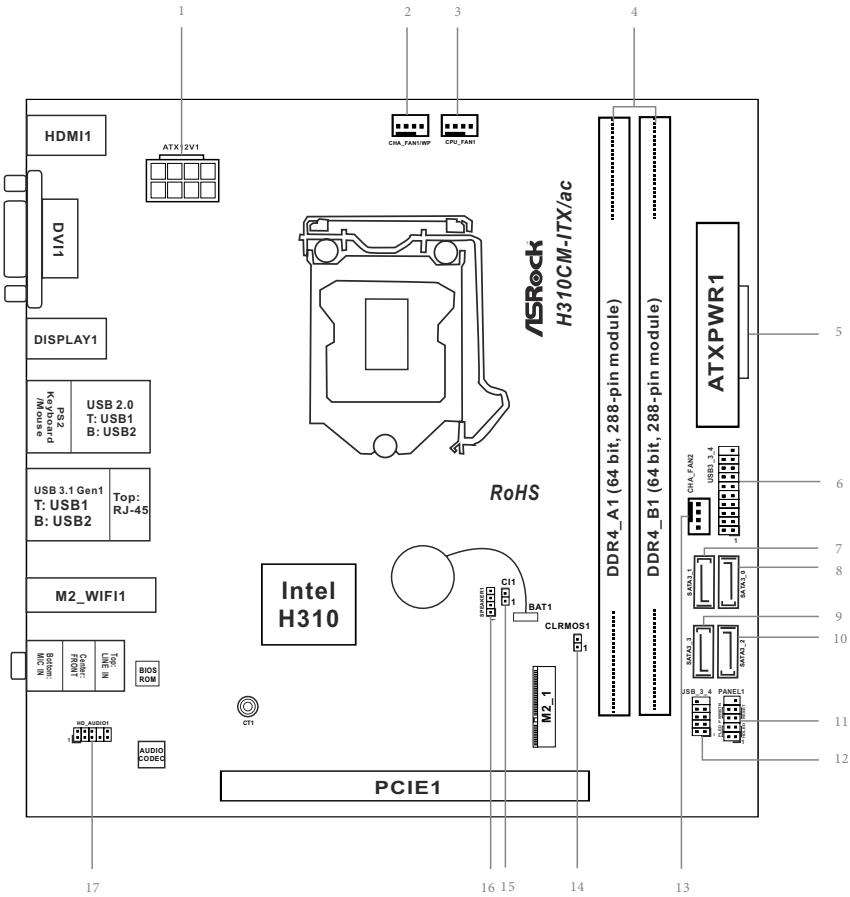

English

No.	Description
1	ATX 12V Power Connector (ATX12V1)
2	Chassis Fan / Waterpump Fan Connector (CHA_FAN1/WP)
3	CPU Fan Connector (CPU_FAN1)
4	2 x 288-pin DDR4 DIMM Slots (DDR4_A1, DDR4_B1)
5	ATX Power Connector (ATXPWR1)
6	USB 3.1 Gen1 Header (USB3_3_4)
7	SATA3 Connector (SATA3_1)
8	SATA3 Connector (SATA3_0)
9	SATA3 Connector (SATA3_3)
10	SATA3 Connector (SATA3_2)
11	System Panel Header (PANEL1)
12	USB 2.0 Header (USB_3_4)
13	Chassis Fan Connector (CHA_FAN2)
14	Clear CMOS Jumper (CLRMOS1)
15	Chassis Intrusion Header (CI1)
16	Chassis Speaker Header (SPEAKER1)
17	Front Panel Audio Header (HD_AUDIO1)

I/O Panel

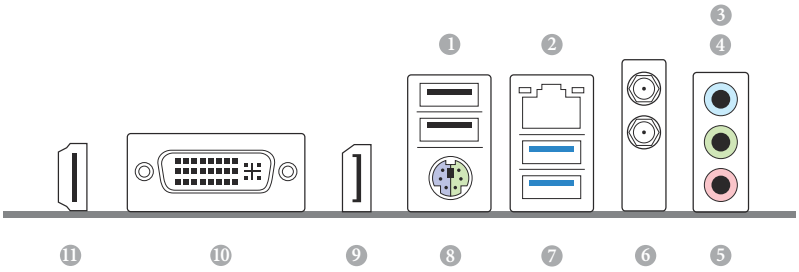

No.	Description	No.	Description
1	USB 2.0 Ports (USB_1_2)	7	USB 3.1 Gen1 Ports (USB3_1_2)
2	LAN RJ-45 Port*	8	PS/2 Mouse/Keyboard Port
3	Line In (Light Blue)**	9	DisplayPort 1.2 (DISPLAY1)
4	Front Speaker (Lime)**	10	DVI-I Port (DVI1)
5	Microphone (Pink)**	11	HDMI Port (HDMI1)
6	Antenna Ports		

** There are two LEDs on each LAN port. Please refer to the table below for the LAN port LED indications.*

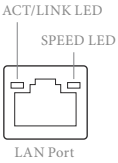

Activity / Link LED		Speed LED	
Status	**Description**	**Status**	**Description**
Off	No Link	Off	10Mbps connection
Blinking	Data Activity	Orange	100Mbps connection
On	Link	Green	1Gbps connection

English

*** To configure 7.1 CH HD Audio, it is required to use an HD front panel audio module and enable the multi-channel audio feature through the audio driver.*

Please set Speaker Configuration to "7.1 Speaker" in the Realtek HD Audio Manager.

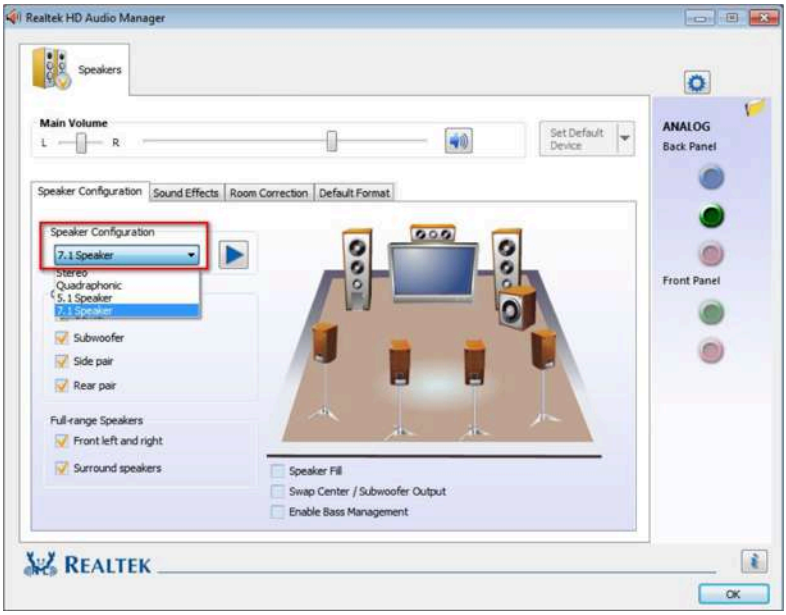

Function of the Audio Ports in 7.1-channel Configuration:

Port	Function
Light Blue (Rear panel)	Rear Speaker Out
Lime (Rear panel)	Front Speaker Out
Pink (Rear panel)	Central /Subwoofer Speaker Out
Lime (Front panel)	Side Speaker Out

English

WiFi-802.11ac Module and ASRock WiFi 2.4/5 GHz Antenna

WiFi-802.11ac + BT Module

This motherboard comes with an exclusive WiFi 802.11 a/b/g/n/ac + BT v4.2 module that offers support for WiFi 802.11 a/b/g/n/ac connectivity standards and Bluetooth v4.2. WiFi + BT module is an easy-to-use wireless local area network (WLAN) adapter to support WiFi + BT. Bluetooth v4.2 standard features Smart Ready technology that adds a whole new class of functionality into the mobile devices. BT 4.2 also includes Low Energy Technology and ensures extraordinary low power consumption for PCs.
* The transmission speed may vary according to the environment.

WiFi Antennas Installation Guide

Step 1

Prepare the WiFi 2.4/5 GHz Antennas that come with the package.

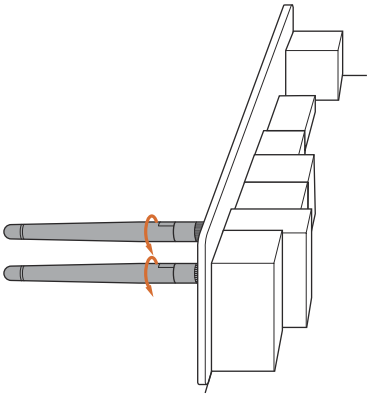

Step 2

Connect the two WiFi 2.4/5 GHz Antennas to the antenna connectors. Turn the antenna clockwise until it is securely connected.

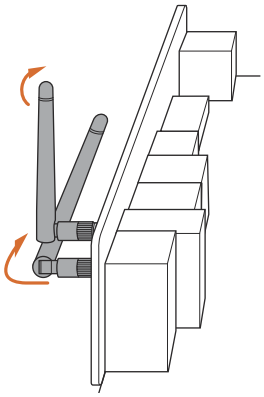

Step 3

Set the WiFi 2.4/5 GHz Antenna as shown in the illustration.

*You may need to adjust the direction of the antenna for a stronger signal.

English

Chapter 1 Introduction

Thank you for purchasing ASRock H310CM-ITX/ac motherboard, a reliable motherboard produced under ASRock's consistently stringent quality control. It delivers excellent performance with robust design conforming to ASRock's commitment to quality and endurance.

Because the motherboard specifications and the BIOS software might be updated, the content of this documentation will be subject to change without notice. In case any modifications of this documentation occur, the updated version will be available on ASRock's website without further notice. If you require technical support related to this motherboard, please visit our website for specific information about the model you are using. You may find the latest VGA cards and CPU support list on ASRock's website as well. ASRock website http://www.asrock.com.

1.1 Package Contents

- ASRock H310CM-ITX/ac Motherboard (Mini-ITX Form Factor)
- ASRock H310CM-ITX/ac Quick Installation Guide
- ASRock H310CM-ITX/ac Support CD
- 2 x Serial ATA (SATA) Data Cables (Optional)
- 1 x I/O Panel Shield
- 2 x ASRock WiFi 2.4/5 GHz Antennas (Optional)
- 1 x Screw for M.2 Socket (Optional)

1.2 Specifications

Platform	• Mini-ITX Form Factor • Solid Capacitor design
CPU	• Supports 8th Generation Intel® Core™ Processors (Socket 1151) • Digi Power design • 5 Power Phase design • Supports Intel® Turbo Boost 2.0 Technology
Chipset	• Intel® H310
Memory	• Dual Channel DDR4 Memory Technology • 2 x DDR4 DIMM Slots • Supports DDR4 2666/2400/2133 non-ECC, un-buffered memory • Supports ECC UDIMM memory modules (operate in non-ECC mode) • Max. capacity of system memory: 32GB • Supports Intel® Extreme Memory Profile (XMP) 2.0 • 15μ Gold Contact in DIMM Slots
Expansion Slot	• 1 x PCI Express 3.0 x16 Slot (PCIE1: x16 mode) * Supports NVMe SSD as boot disks • 1 x Vertical M.2 Socket (Key E) with the bundled WiFi-802.11ac module (on the rear I/O)
Graphics	* Intel® UHD Graphics Built-in Visuals and the VGA outputs can be supported only with processors which are GPU integrated. • Supports Intel® UHD Graphics Built-in Visuals : Intel® Quick Sync Video with AVC, MVC (S3D) and MPEG-2 Full HW Encode1, Intel® InTru™ 3D, Intel® Clear Video HD Technology, Intel® Insider™, Intel® UHD Graphics • DirectX 12

English

- HWAEncode/Decode: AVC/H.264, HEVC/H.265 8-bit, HEVC/H.265 10-bit, VP8, VP9 8-bit, VP9 10-bit (Decode only), MPEG2, MJPEG, VC-1 (Decode only)
- Three graphics output options: DVI-I, HDMI and DisplayPort 1.2

* Supports up to 2 displays simultaneously

- Supports HDMI with max. resolution up to 4K x 2K (4096x2160) @ 30Hz
- Supports DisplayPort 1.2 with max. resolution up to 4K x 2K (4096x2304) @ 60Hz
- Supports DVI-I with max. resolution up to 1920x1200 @ 60Hz
- Supports Auto Lip Sync, Deep Color (12bpc), xvYCC and HBR (High Bit Rate Audio) with HDMI Port (Compliant HDMI monitor is required)
- Supports HDCP with DVI-I, HDMI and DisplayPort 1.2 Ports
- Supports 4K Ultra HD (UHD) playback with HDMI and DisplayPort 1.2 Ports

Audio

- 7.1 CH HD Audio (Realtek ALC887 Audio Codec)

* To configure 7.1 CH HD Audio, it is required to use an HD front panel audio module and enable the multi-channel audio feature through the audio driver.

- Supports Surge Protection
- ELNA Audio Caps

LAN

- Gigabit LAN 10/100/1000 Mb/s
- Giga PHY Intel® I219V
- Supports Wake-On-LAN
- Supports Lightning/ESD Protection
- Supports Energy Efficient Ethernet 802.3az
- Supports PXE

Wireless LAN	• Intel® 802.11ac WiFi Module • Supports IEEE 802.11a/b/g/n/ac • Supports Dual-Band (2.4/5 GHz) • Supports high speed wireless connections up to 433Mbps • Supports Bluetooth 4.2 / 3.0 + High speed class II
Rear Panel I/O	• 2 x Antenna Ports • 1 x PS/2 Mouse/Keyboard Port • 1 x DVI-I Port • 1 x HDMI Port • 1 x DisplayPort 1.2 • 2 x USB 2.0 Ports (Supports ESD Protection) • 2 x USB 3.1 Gen1 Ports (Supports ESD Protection) • 1 x RJ-45 LAN Port with LED (ACT/LINK LED and SPEED LED) • HD Audio Jacks: Line in / Front Speaker / Microphone
Storage	• 4 x SATA3 6.0 Gb/s Connectors, support NCQ, AHCI and Hot Plug* * If M2_1 is occupied by a SATA-type M.2 device, SATA3_0 will be disabled. • 1 x M.2 Socket, supports M Key type 2280 M.2 SATA3 6.0 Gb/s module and M.2 PCI Express module up to Gen2 x4 (20 Gb/s)** ** Supports NVMe SSD as boot disks ** Supports ASRock U.2 Kit
Connector	• 1 x Chassis Intrusion Headers • 1 x CPU Fan Connector (4-pin) * The CPU Fan Connector supports the CPU fan of maximum 1A (12W) fan power. • 1 x Chassis Fan Connector (4-pin) * The Chassis Fan Connector supports the Chassis fan of maximum 1A (12W) fan power. • 1 x Chassis/Water Pump Fan Connector (4-pin) (Smart Fan Speed Control) * The Chassis/Water Pump Fan supports the water cooler fan of maximum 2A (24W) fan power. * CHA_FAN1/WP can auto detect if 3-pin or 4-pin fan is in use.

English

	• 1 x 24 pin ATX Power Connector • 1 x 8 pin 12V Power Connector • 1 x Front Panel Audio Connector • 1 x USB 2.0 Header (Supports 2 USB 2.0 ports) (Supports ESD Protection) • 1 x USB 3.1 Gen1 Header (Supports 2 USB 3.1 Gen1 ports) (Supports ESD Protection)
BIOS Feature	• AMI UEFI Legal BIOS with multilingual GUI support • ACPI 6.0 Compliant wake up events • SMBIOS 2.7 Support • CPU, DRAM, PCH 1.0V, VCCST Voltage Multi-adjustment
Hardware Monitor	• Temperature Sensing: CPU, Chassis, Chassis/Water Pump Fans • Fan Tachometer: CPU, Chassis, Chassis/Water Pump Fans • Quiet Fan (Auto adjust chassis fan speed by CPU temperature): CPU, Chassis, Chassis/Water Pump Fans • Fan Multi-Speed Control: CPU, Chassis, Chassis/Water Pump Fans • CASE OPEN detection • Voltage monitoring: +12V, +5V, +3.3V, CPU Vcore
OS	Microsoft® Windows® 10 64-bit
Certifications	• FCC, CE • ErP/EuP ready (ErP/EuP ready power supply is required)

** For detailed product information, please visit our website: http://www.asrock.com*

Please realize that there is a certain risk involved with overclocking, including adjusting the setting in the BIOS, applying Untied Overclocking Technology, or using third-party overclocking tools. Overclocking may affect your system's stability, or even cause damage to the components and devices of your system. It should be done at your own risk and expense. We are not responsible for possible damage caused by overclocking.

English

Chapter 2 Installation

This is a Mini-ITX form factor motherboard. Before you install the motherboard, study the configuration of your chassis to ensure that the motherboard fits into it.

Pre-installation Precautions

Take note of the following precautions before you install motherboard components or change any motherboard settings.

- Make sure to unplug the power cord before installing or removing the motherboard components. Failure to do so may cause physical injuries and damages to motherboard components.
- In order to avoid damage from static electricity to the motherboard's components, NEVER place your motherboard directly on a carpet. Also remember to use a grounded wrist strap or touch a safety grounded object before you handle the components.
- Hold components by the edges and do not touch the ICs.
- Whenever you uninstall any components, place them on a grounded anti-static pad or in the bag that comes with the components.
- When placing screws to secure the motherboard to the chassis, please do not over-tighten the screws! Doing so may damage the motherboard.

2.1 Installing the CPU

1. *Before you insert the 1151-Pin CPU into the socket, please check if the **PnP cap** is on the socket, if the CPU surface is unclean, or if there are any **bent pins** in the socket. Do not force to insert the CPU into the socket if above situation is found. Otherwise, the CPU will be seriously damaged.*
2. *Unplug all power cables before installing the CPU.*

1

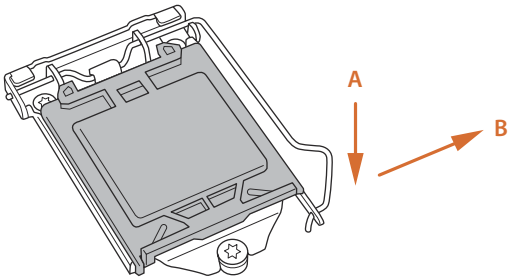

2

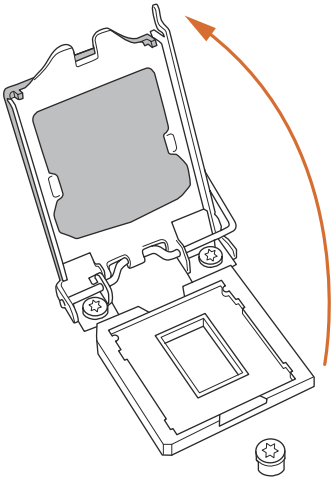

English

3

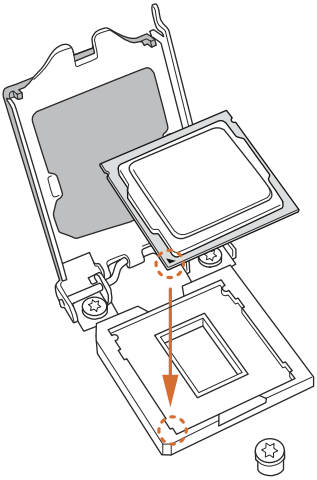

4

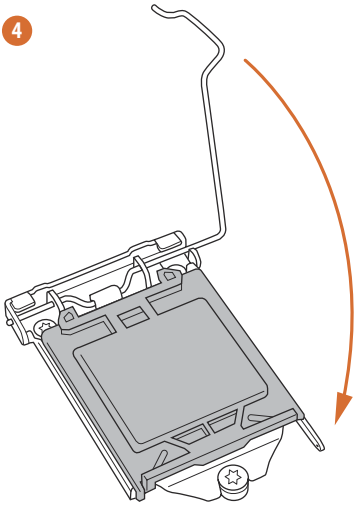

5

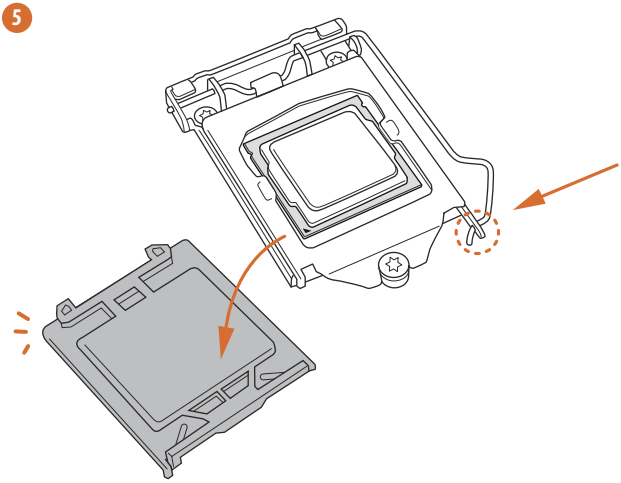

Please save and replace the cover if the processor is removed. The cover must be placed if you wish to return the motherboard for after service.

2.2 Installing the CPU Fan and Heatsink

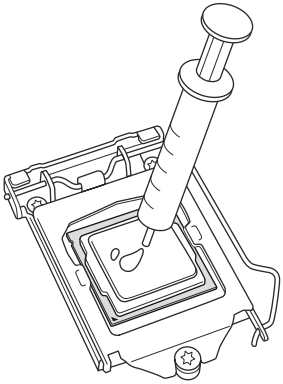

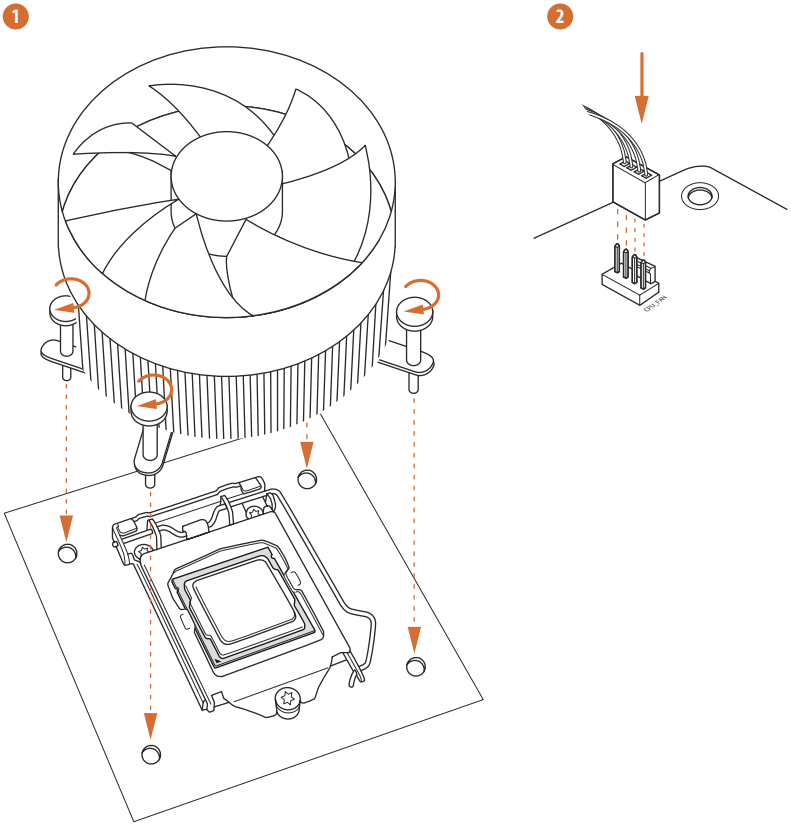

2.3 Installing Memory Modules (DIMM)

This motherboard provides two 288-pin DDR4 (Double Data Rate 4) DIMM slots, and supports Dual Channel Memory Technology.

1. *For dual channel configuration, you always need to install identical (the same brand, speed, size and chip-type) DDR4 DIMM pairs.*
2. *It is unable to activate Dual Channel Memory Technology with only one memory module installed.*
3. *It is not allowed to install a DDR, DDR2 or DDR3 memory module into a DDR4 slot; otherwise, this motherboard and DIMM may be damaged..*

The DIMM only fits in one correct orientation. It will cause permanent damage to the motherboard and the DIMM if you force the DIMM into the slot at incorrect orientation.

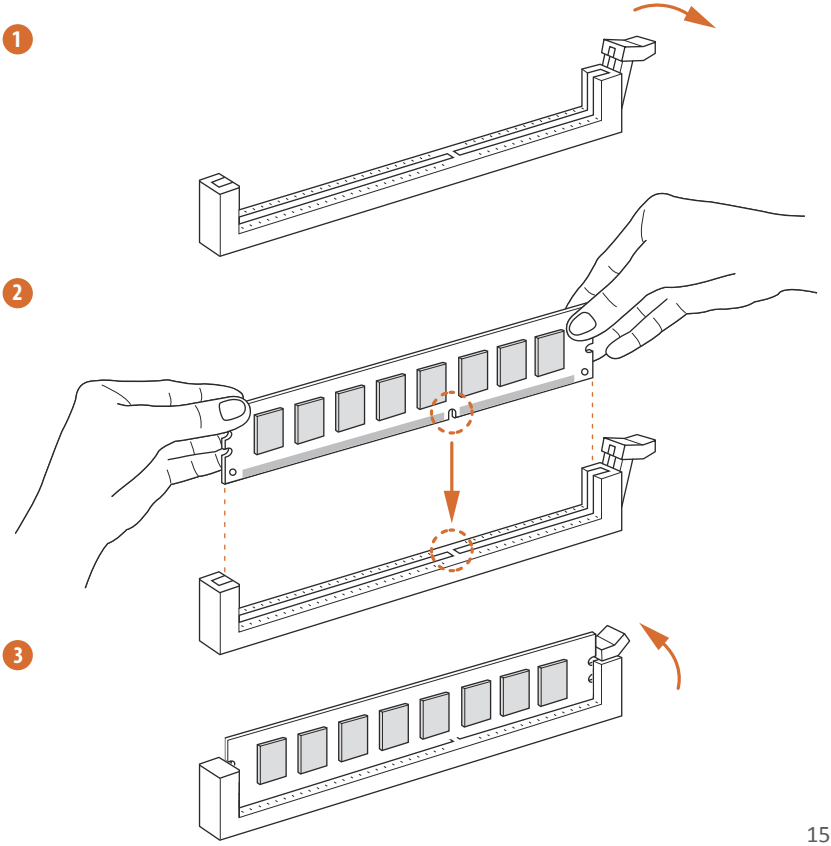

2.4 Expansion Slot (PCI Express Slot)

There is 1 PCI Express slot on the motherboard.

Before installing an expansion card, please make sure that the power supply is switched off or the power cord is unplugged. Please read the documentation of the expansion card and make necessary hardware settings for the card before you start the installation.

PCIe slot:

PCIE1 (PCIe 3.0 x16 slot) is used for PCI Express x16 lane width graphics cards.

2.5 Jumpers Setup

The illustration shows how jumpers are setup. When the jumper cap is placed on the pins, the jumper is "Short". If no jumper cap is placed on the pins, the jumper is "Open".

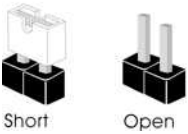

Clear CMOS Jumper (CLRMOS1) (see p.1, No. 14)	 2-pin Jumper

CLRMOS1 allows you to clear the data in CMOS. To clear and reset the system parameters to default setup, please turn off the computer and unplug the power cord from the power supply. After waiting for 15 seconds, use a jumper cap to short the pins on CLRMOS1 for 5 seconds. However, please do not clear the CMOS right after you update the BIOS. If you need to clear the CMOS when you just finish updating the BIOS, you must boot up the system first, and then shut it down before you do the clear-CMOS action. Please be noted that the password, date, time, and user default profile will be cleared only if the CMOS battery is removed. Please remember toremove the jumper cap after clearing the CMOS.

If you clear the CMOS, the case open may be detected. Please adjust the BIOS option "Clear Status" to clear the record of previous chassis intrusion status.

2.6 Onboard Headers and Connectors

Onboard headers and connectors are NOT jumpers. Do NOT place jumper caps over these headers and connectors. Placing jumper caps over the headers and connectors will cause permanent damage to the motherboard.

System Panel Header
(9-pin PANEL1)
(see p.1, No. 11)

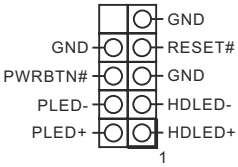

Connect the power switch, reset switch and system status indicator on the chassis to this header according to the pin assignments below. Note the positive and negative pins before connecting the cables.

PWRBTN (Power Switch):
Connect to the power switch on the chassis front panel. You may configure the way to turn off your system using the power switch.

RESET (Reset Switch):
Connect to the reset switch on the chassis front panel. Press the reset switch to restart the computer if the computer freezes and fails to perform a normal restart.

PLED (System Power LED):
Connect to the power status indicator on the chassis front panel. The LED is on when the system is operating. The LED keeps blinking when the system is in S1/S3 sleep state. The LED is off when the system is in S4 sleep state or powered off (S5).

HDLED (Hard Drive Activity LED):
Connect to the hard drive activity LED on the chassis front panel. The LED is on when the hard drive is reading or writing data.

The front panel design may differ by chassis. A front panel module mainly consists of power switch, reset switch, power LED, hard drive activity LED, speaker and etc. When connecting your chassis front panel module to this header, make sure the wire assignments and the pin assignments are matched correctly.

Serial ATA3 Connectors
(SATA3_0:
see p.1, No. 8)
(SATA3_1:
see p.1, No. 7)
(SATA3_2:
see p.1, No. 10)
(SATA3_3:
see p.1, No. 9)

These four SATA3 connectors support SATA data cables for internal storage devices with up to 6.0 Gb/s data transfer rate.

**If M2_1 is occupied by a SATA-type M.2 device, SATA3_0 will be disabled.*

English

USB 2.0 Header
(9-pin USB_3_4)
(see p.1, No. 12)

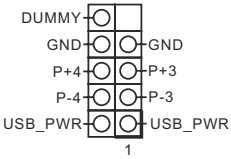

There is one USB2.0 header on this motherboard. This USB 2.0 header can support two ports.

USB 3.1 Gen1 Header
(19-pin USB3_3_4)
(see p.1, No. 6)

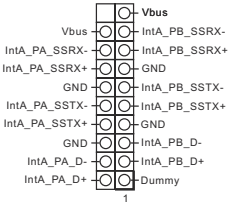

There is one header on this motherboard. This USB 3.1 Gen1 header can support two ports.

Front Panel Audio Header
(9-pin HD_AUDIO1)
(see p.1, No. 17)

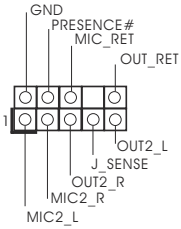

This header is for connecting audio devices to the front audio panel.

1. *High Definition Audio supports Jack Sensing, but the panel wire on the chassis must support HDA to function correctly. Please follow the instructions in our manual and chassis manual to install your system.*
2. *If you use an AC'97 audio panel, please install it to the front panel audio header by the steps below:*
   A. Connect Mic_IN (MIC) to MIC2_L.
   B. Connect Audio_R (RIN) to OUT2_R and Audio_L (LIN) to OUT2_L.
   C. Connect Ground (GND) to Ground (GND).
   D. MIC_RET and OUT_RET are for the HD audio panel only. You don't need to connect them for the AC'97 audio panel.
   E. To activate the front mic, go to the "FrontMic" Tab in the Realtek Control panel and adjust "Recording Volume".

Chassis Speaker Header
(4-pin SPEAKER1)
(see p.1, No. 16)

Please connect the chassis speaker to this header.

English

Chassis Fan / Waterpump Fan Connector
(4-pin CHA_FAN1/WP)
(see p.1, No. 2)

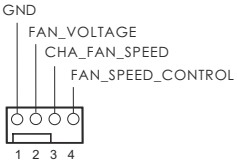

Please connect fan cables to the fan connector and match the black wire to the ground pin.

Chassis Fan Connector
(4-pin CHA_FAN2)
(see p.1, No. 13)

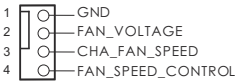

Please connect fan cables to the fan connector and match the black wire to the ground pin.

CPU Fan Connector
(4-pin CPU_FAN1)
(see p.1, No. 3)

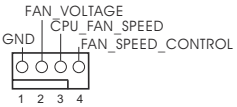

This motherboard provides a 4-Pin CPU fan (Quiet Fan) connector. If you plan to connect a 3-Pin CPU fan, please connect it to Pin 1-3.

ATX Power Connector
(24-pin ATXPWR1)
(see p.1, No. 5)

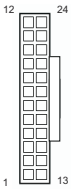

This motherboard provides a 24-pin ATX power connector.

ATX 12V Power Connector
(4-pin ATX12V1)
(see p.1, No. 1)

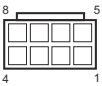

Please connect an ATX 12V power supply to this connector.

Chassis Intrusion Header
(2-pin CI1)
(see p.1, No. 15)

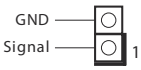

This motherboard supports CASE OPEN detection feature that detects if the chassis cove has been removed. This feature requires a chassis with chassis intrusion detection design.

English

2.7 M.2_SSD (NGFF) Module Installation Guide (M2_1)

The M.2, also known as the Next Generation Form Factor (NGFF), is a small size and versatile card edge connector that aims to replace mPCIe and mSATA. The Socket (M2_1) supports M.2 SATA3 6.0 Gb/s module and M.2 PCI Express module up to Gen2 x4 (20 Gb/s).

* If M2_1 is occupied by a SATA-type M.2 device, SATA3_0 will be disabled.

Installing the M.2_SSD (NGFF) Module

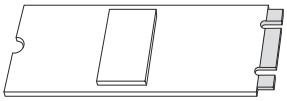

Step 1

Prepare a M.2_SSD (NGFF) module and the screw.

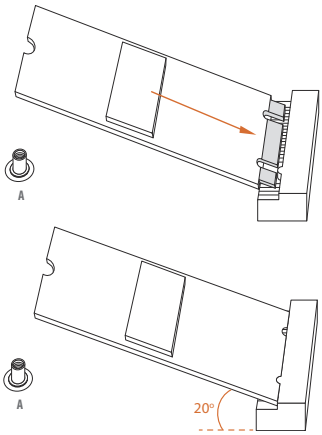

Step 2

Gently insert the M.2 (NGFF) SSD module into the M.2 slot. Please be aware that the M.2 (NGFF) SSD module only fits in one orientation.

No.	1
Nut Location	A
PCB Length	8cm
Module Type	Type 2280

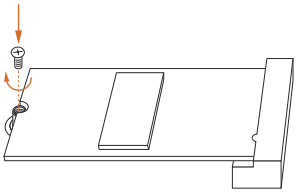

Step 3

Tighten the screw with a screwdriver to secure the module into place. Please do not overtighten the screw as this might damage the module.

For the latest updates of M.2_SSD (NFGG) module support list, please visit our website for details: http://www.asrock.com

Technische Daten

Plattform	• Mini-ITX-Formfaktor • Feststoffkondensator-Design
Prozessor	• Unterstützt Intel® Core™-Prozessoren (Sockel 1151) der 8ten Generation • Digi Power design • 5-Leistungsphasendesign • Unterstützt Intel® Turbo Boost 2.0-Technologie
Chipsatz	• Intel® H310
Speicher	• Dualkanal-DDR4-Speichertechnologie • 2 x DDR4-DIMM-Steckplätze • Unterstützt ungepufferten DDR4-2666/2400/2133-Non-ECC-Speicher • Unterstützt ECC-UDIMM-Speichermodule (Betrieb im non-ECC-Modus) • Systemspeicher, max. Kapazität: 32 GB • Unterstützt Intel® Extreme Memory Profile (XMP) 2.0 • 15-µ-Goldkontakt in DIMM-Steckplätze
Erweiterungssteckplatz	• 1 x PCI-Express 3.0-x16-Steckplatz (PCIE1:x16-Modus) * Unterstützt NVMe-SSD als Bootplatte • 1 x vertikaler M.2-Sockel (Key E) mit dem mitgelieferten 802.11ac-WLAN-Modul (an den rückseitigen E/A)
Grafikkarte	* Integrierte Intel® UHD Graphics-Visualisierung und VGA-Ausgänge können nur mit Prozessoren unterstützt werden, die GPU-integriert sind. • Unterstützt integrierte Intel® UHD Graphics-Visualisierung: Intel® Quick Sync Video mit AVC, MVC (S3D) und MPEG-2 Full HW Encode1, Intel® InTru™ 3D, Intel® Clear Video HD Technology, Intel® Insider™, Intel® UHD Graphics • DirectX 12 • HWA encodieren/decodieren: AVC/H.264, HEVC/H.265 8 bit, HEVC/H.265 10 bit, VP8, VP9 8 bit, VP9 10 bit (nur Dekodierung), MPEG2, MJPEG, VC-1 (nur Dekodierung) • Drei Grafikkarten-Ausgangsoptionen: DVI-I, HDMI und DisplayPort 1.2 *Unterstützt bis zu 2 Displays gleichzeitig • Unterstützt HDMI mit maximaler Auflösung von 4K x 2K (4096 x 2160) bei 30Hz

	• Unterstützt DisplayPort 1.2 mit maximaler Auflösung von 4K x 2K (4096 x 2304) bei 60 Hz • Unterstützt DVI-I mit maximaler Auflösung von 1920 x 1200 bei 60 Hz • Unterstützt Auto-Lippensynchronizität, hohe Farbtiefe (12 bpc), xvYCC und HBR (Audio mit hoher Bitrate) mit HDMI-Port (konformer HDMI-Monitor erforderlich) • Unterstützt HDCP mit DVI-I-, HDMI- und DisplayPort 1.2-Ports • Unterstützt 4K-Ultra-HD- (UHD) Wiedergabe mit HDMI- und DisplayPort-1.2-Ports
Audio	• 7.1-Kanal-HD-Audio (Realtek ALC887-Audiocodec) * Zur Konfiguration von 7.1-Kanal-HD-Audio müssen Sie ein HD-Frontblenden-Audiomodul nutzen und den Mehrkanalton über den Audiotreiber aktivieren. • Unterstützt Überspannungsschutz • ELNA-Audiokondensatoren
LAN	• Gigabit LAN 10/100/1000 Mb/s • Giga PHY Intel® I219V • Unterstützt Wake-On-LAN • Unterstützt Schutz gegen Blitzschlag/elektrostatische Entladung • Unterstützt energieeffizientes Ethernet 802.3az • Unterstützt PXE
Wireless LAN	• Intel®-802.11ac-WLAN-Modul • Unterstützt IEEE 802.11a/b/g/n/ac • Unterstützt Dualband (2,4/5 GHz) • Unterstützt drahtlose Hochgeschwindigkeitsverbindungen bis 433 Mb/s • Unterstützt Bluetooth 4.2 / 3.0 + High-Speed, Klasse II
Rückblende, E/A	• 2 x Antennenanschluss • 1 x PS/2-Maus-/Tastaturanschluss • 1 x DVI-I-Port • 1 x HDMI-Port • 1 x DisplayPort 1.2 • 2 x USB-2.0-Ports (unterstützt Schutz gegen elektrostatische Entladung) • 2 x USB-3.1-Gen1-Ports (unterstützt Schutz gegen elektrostatische Entladung) • 1 x RJ-45-LAN-Port mit LED (Aktivität/Verbindung-LED und Geschwindigkeit-LED)

	• HD-Audioanschlüsse: Line-in / Vorderer Lautsprecher / Mikrofon
Speicher	• 4 x SATA-III-6,0-Gb/s-Anschlüsse, unterstützt NCQ, AHCI und Hot-Plugging* * Wenn M2_1 durch ein SATA-Typ-M.2-Gerät belegt ist, wird SATA3_0 deaktiviert. • 1 x M.2-Sockel, unterstützt M-Key-Typ-2280-M.2-SATA-III-6,0-Gb/s-Modul und M.2-PCI-Express-Modul bis Gen2 x 4 (20 Gb/s)** ** Unterstützt NVMe-SSD als Bootplatte ** Unterstützt ASRock U.2-Kit
Anschluss	• 1 x Gehäuseeingriff-Stiftleisten • 1 x CPU-Lüfteranschluss (4-polig) * Der CPU-Lüfteranschluss unterstützt einen CPU-Lüfter mit einer maximalen Lüfterleistung von 1 A (12 W). • 1 x Gehäuse-Lüfteranschluss (4-polig) * Der Gehäuse-Lüfteranschluss unterstützt einen Gehäuse-Lüfter mit einer maximalen Lüfterleistung von 1 A (12 W). • 1 x Anschluss für Gehäuse-/Wasserpumpenlüfter (4-polig) (intelligente Lüftergeschwindigkeitssteuerung) * Der Gehäuse-/Wasserpumpenlüfter unterstützt einen Wasserkühler-lüfter mit einer maximalen Lüfterleistung von 2 A (24 W). * CHA_FAN1/WP können automatisch erkennen, ob ein 3- oder 4-poliger Lüfter verwendet wird. • 1 x 24-poliger ATX-Netzanschluss • 1 x 8-poliger 12-V-Netzanschluss • 1 x Audioanschluss an Frontblende • 1 x USB 2.0-Stiftleiste (unterstützt zwei USB 2.0-Ports) (unterstützt Schutz gegen elektrostatische Entladung) • 1 x USB 3.1 Gen1-Stiftleiste (unterstützt zwei USB 3.1 Gen1-Ports) (unterstützt Schutz gegen elektrostatische Entladung)
Betriebssystem	Microsoft® Windows® 10, 64 Bit

** Detaillierte Produktinformationen finden Sie auf unserer Webseite: http://www.asrock.com*

Bitte beachten Sie, dass mit einer Übertaktung, zu der die Anpassung von BIOS-Einstellungen, die Anwendung der Untied Overclocking Technology oder die Nutzung von Übertaktungswerkzeugen von Drittanbietern zählen, bestimmte Risiken verbunden sind. Eine Übertaktung kann sich auf die Stabilität Ihres Systems auswirken und sogar Komponenten und Geräte Ihres Systems beschädigen. Sie sollte auf eigene Gefahr und eigene Kosten durchgeführt werden. Wir übernehmen keine Verantwortung für mögliche Schäden, die durch eine Übertaktung verursacht wurden.

Spécifications

Plateforme	• Facteur de forme Mini-ITX • Conception à condensateurs solides
Processeur	• Prend en charge les processeurs 8ème génération Intel® Core™ (socket 1151) • Digi Power design • Alimentation à 5 phases • Prend en charge la technologie Intel® Turbo Boost 2.0
Chipset	• Intel® H310
Mémoire	• Technologie mémoire double canal DDR4 • 2 x fentes DIMM DDR4 • Prend en charge les mémoires sans tampon non ECC DDR4 2666/2400/2133 • Prend en charge les modules mémoire UDIMM ECC (fonctionne en mode non-ECC) • Capacité max. de la mémoire système : 32GB • Prend en charge Intel® Extreme Memory Profile (XMP) 2.0 • Contacts dorés 15µ sur fentes DIMM
Fente d'expansion	• 1 x fente PCI Express 3.0 x 16 (PCIE1 :mode x16) * Prend en charge les SSD NVMe comme disques de démarrage • 1 x socket M.2 vertical (touche E) avec le module Wi-Fi 802.11ac fourni (sur l'E/S arrière)
Graphiques	* La technologie Intel® UHD Graphics Built-in Visuals et les sorties VGA sont uniquement prises en charge par les processeurs intégrant un contrôleur graphique. • Prend en charge la technologie Intel® UHD Graphics Built-in Visuals : Intel® Quick Sync Video avec AVC, MVC (S3D) et MPEG-2 Full HW Encode1, Intel® InTru™ 3D, Intel® Clear Video HD Technology, Intel® Insider™, Intel® UHD Graphics • DirectX 12 • Codage/Décodage HWA : AVC/H.264, HEVC/H.265 8 bits, HEVC/H.265 10 bits, VP8, VP9 8 bits, VP9 10 bits (Encodage uniquement), MPEG2, MJPEG, VC-1 (Encodage uniquement) • Trois options de sortie graphique : DVI-I, HDMI et DisplayPort 1.2 *Prend en charge jusqu'à 2 écrans simultanément

	• Prend en charge la technologie HDMI avec résolution maximale de 4K × 2K (4096x2160) @ 30Hz • Prend en charge la technologie DisplayPort 1.2 avec résolution maximale de 4K × 2K (4096x2304) @ 60 Hz • Prend en charge le mode DVI-I avec une résolution maximale de 1920x1200 @ 60Hz • Prend en charge les technologies Auto Lip Sync, Deep Color (12bpc), xvYCC et HBR (High Bit Rate Audio) avec port HDMI (un écran compatible HDMI est requis) • Prend en charge HDCP via ports DVI-I, HDMI et DisplayPort 1.2 • Prend en charge la lecture 4K Ultra HD (UHD) avec les ports HDMI et DisplayPort 1.2
Audio	• Audio 7.1 CH HD (Codec audio Realtek ALC887) *Pour configurer l'audio 7.1 CH HD, il est nécessaire d'utiliser un module audio HD pour panneau frontal et d'activer la fonction audio multicanal via le pilote audio. • Prend en charge la protection contre les surtensions • Capuchons ELNA Audio
Réseau	• Gigabit LAN 10/100/1000 Mo/s • Giga PHY Intel® I219V • Prend en charge la fonction Wake-On-LAN • Prend en charge la protection contre la foudre/les décharges électrostatiques • Prend en charge la fonction d'économie d'énergie Ethernet 802.3az • Prend en charge PXE
Réseau sans-fil	• Module Wi-Fi 802.11ac Intel® • Prend en charge IEEE 802.11a/b/g/n/ac • Prend en charge le mode Dual-Band (2,4/5 GHz) • Prend en charge la connexion sans-fil à haute vitesse jusqu'à 433Mbps • Prend en charge Bluetooth 4.2 / 3.0 + haute vitesse classe II
Connectique du panneau arrière	• 2 x ports antenne • 1 x port souris/clavier PS/2 • 1 x port DVI-I • 1 x port HDMI • 1 x DisplayPort 1.2 • 2 x ports USB 2.0 (Protection contre les décharges électrostatiques) • 2 x ports USB 3.1 Gen1 (Protection contre les décharges électrostatiques)

	• 1 x port RJ-45 LAN avec LED (LED ACT/LIEN et LED VITESSE) • Connecteurs jack audio HD : Entrée ligne / haut-parleur avant / microphone
Stockage	• 4 x connecteurs SATA3 6,0 Go/s, compatibles avec les fonctions NCQ, AHCI et « Hot Plug »* * Si M2_1 est occupé par un périphérique M.2 type SATA, SATA3_0 est désactivé. • 1 x socket M.2, prend en charge les modules M.2 SATA3 6,0 Go/s type 2280 touche M et M.2 PCI Express jusqu'à Gen2 x4 (20 Go/s)** ** Prend en charge les SSD NVMe comme disques de démarrage ** Prend en charge le kit ASRock U.2
Connecteur	• 1 x embase d'intrusion châssis • 1 x connecteur pour ventilateur de CPU (4 broches) * Le connecteur pour ventilateur de CPU prend en charge un ventilateur de CPU d'une puissance maximale de 1 A (12 W). • 1 x connecteur pour ventilateur de châssis (4 broches) * Le connecteur pour ventilateur de châssis prend en charge un ventilateur de châssis d'une puissance maximale de 1 A (12 W). • 1 x connecteur pour ventilateur de châssis/pompe à eau (4 broches) (contrôle de vitesse de ventilateur intelligent) * Le ventilateur de châssis/pompe à eau prend en charge un ventilateur de refroidisseur d'eau d'une puissance maximale de 2 A (24 W). * CHA_FAN1/WP peuvent détecter automatiquement si un ventilateur 3 broches ou 4 broches est utilisé. • 1 x connecteur d'alimentation ATX 24 broches • 1 x connecteur d'alimentation 12 V 8 broches • 1 x connecteur audio panneau frontal • 1 x embase USB 2.0 (2 ports USB 2.0 pris en charge) (Protection contre les décharges électrostatiques) • 1 x embase USB 3.1 Gen1 (2 ports USB 3.1 Gen1 pris en charge) (Protection contre les décharges électrostatiques)
Système d'exploitation	Microsoft® Windows® 10 64 bits

** pour des informations détaillées de nos produits, veuillez visiter notre site : http://www.asrock.com*

Il est important de signaler que l'overclocking présente certains risques, incluant des modifications du BIOS, l'application d'une technologie d'overclocking déliée et l'utilisation d'outils d'overclocking développés par des tiers. La stabilité de votre système peut être affectée par ces pratiques, voire provoquer des dommages aux composants et aux périphériques du système. L'overclocking se fait à vos risques et périls. Nous ne pourrons en aucun cas être tenus pour responsables des dommages éventuels provoqués par l'overclocking.

Specifiche

Piattaforma	• Fattore di forma Mini-ITX • Design condensatore solido
CPU	• Supporta processori 8th Generation Intel® Core™ (Socket 1151) • Digi Power design • Potenza a 5 fasi • Supporta la tecnologia Intel® Turbo Boost 2.0
Chipset	• Intel® H310
Memoria	• Tecnologia memoria DDR4 Dual Channel • 2 x alloggi DIMM DDR4 • Supporto di memoria DDR4 2666/2400/2133 non-ECC, un-buffered • Supporta moduli di memoria ECC UDIMM (funziona in modalità non ECC) • Capacità max. della memoria di sistema: 32 GB • Supporto di XMP (Extreme Memory Profile) Intel® 2.0 • Contatti d'oro 15µ negli alloggi DIMM
Alloggio d'espansione	• 1 x alloggio PCI Express 3.0 x16 (PCIE1:modalità x16) * Supporto di SSD NVMe come disco d'avvio • 1 x Socket M.2 verticale (Key E) con il modulo WiFi-802.11ac fornito (sul pannello I/O posteriore)
Grafica	* La videografica integrata della scheda video UHD Intel® e le uscite VGA possono essere supportate soltanto con processori con GPU integrata. • Supporta la videografica integrata della scheda video UHD Intel®: Intel® Quick Sync Video con AVC, MVC (S3D) e MPEG-2 Full HW Encode1, Intel® InTru™ 3D, Intel® Clear Video HD Technology, Intel® Insider™, Intel® UHD Graphics • DirectX 12 • Codifica/decodifica HWA: AVC/H.264, HEVC/H.265 8-bit, HEVC/H.265 10-bit, VP8, VP9 8-bit, VP9 10-bit (solo decodifica), MPEG2, MJPEG, VC-1 (solo decodifica) • Tre opzioni di output grafico: DVI-I, HDMI e DisplayPort 1.2 *Supporta fino a 2 display simultaneamente

	• Supporta HDMI con risoluzione massima fino a 4K x 2K (4096 x 2160) a 30Hz • Supporta DisplayPort 1.2 con risoluzione massima fino a 4K x 2K (4096x2304) a 60 Hz • Supporta DVI-I con una risoluzione max. fino a 1920 x 1200 a 60 Hz • Supporto delle funzioni Auto Lip Sync, Deep Color (12bpc), xvYCC e HBR (High Bit Rate Audio) con porta HDMI (è necessario un monitor compatibile HDMI) • Supporto HDCP con le porte DVI-I, HDMI e DisplayPort 1.2 • Supporto riproduzione 4K Ultra HD (UHD) sulle porte HDMI e DisplayPort 1.2
Audio	• Audio HD 7.1 CH (codec audio Realtek ALC887) * Per configurare l'audio HD 7.1 canali, è necessario utilizzare un modulo pannello frontale audio HD ed attivare la funzione audio multicanale tramite il driver audio. • Supporta protezione da sovratensione • Cappucci audio ELNA
LAN	• LAN Gigabit 10/100/1000 Mb/s • Giga PHY Intel® I219V • Supporto WOL (Wake-On-LAN) • Supporta protezione da fulmini/scariche elettrostatiche • Supporto Energy Efficient Ethernet 802.3az • Supporto PXE
LAN wireless	• Modulo Intel® 802.11ac WiFi • Supporta IEEE 802.11a/b/g/n/ac • Supporta Dual-Band (2,4/5 GHz) • Supporta la connessione wireless ad alta velocità fino a 433 Mbps • Supporto di Bluetooth 4.2 / 3.0 + High speed Classe II
I/O pannello posteriore	• 2 x porte antenna • 1 x porta mouse/tastiera PS/2 • 1 x porta DVI-I • 1 x porta HDMI • 1 x DisplayPort 1.2 • 2 x porte USB 2.0 (supporto protezione da scariche elettrostatiche)

	• 2 x porte USB 3.1 Gen1 (supporto protezione da scariche elettrostatiche) • 1 x porta LAN RJ-45 con LED (ACT/LINK LED e SPEED LED) • Connettori audio HD: Ingresso linea / altoparlante frontale / microfono
Archiviazione	• 4 x connettori SATA3 6,0 Gb/s supportano NCQ, AHCI e Hot Plug* * Se M2_1 è occupato da un dispositivo M.2 di tipo SATA, SATA3_0 sarà disabilitato. • 1 x socket M.2, supporta il modulo M.2 SATA3 6,0 Gb/s di tipo M Key 2280 ed il modulo M.2 PCI Express fino a Gen2 x4 (20 Gb/s)** ** Supporto di SSD NVMe come disco d'avvio ** Supporta kit ASRock U.2
Connettore	• 1 x header di intrusione nello chassis • 1 x connettore ventola CPU (4-pin) * Il connettore ventola CPU supporta ventole CPU con potenza massima di 1 A (12 W). • 1 x connettore ventola telaio (4-pin) * Il connettore ventola telaio supporta ventole telaio con potenza massima di 1 A (12 W). • 1 x connettore ventola telaio/ventola pompa dell'acqua (4 pin) (Smart Fan Speed Control) * La ventola telaio/ventola pompa dell'acqua supporta ventole di sistemi di raffreddamento ad acqua di potenza massima di 2A (24W). * CHA_FAN1/WP sono in grado di rilevare se è in uso una ventola a 3 pin o 4 a pin. • 1 x connettore alimentazione ATX 24 pin • 1 x connettore alimentazione 12 V 8-pin • 1 x connettore audio pannello frontale • 1 x connettore USB 2.0 (supporto di 2 porte USB 2.0) (supporto protezione da scariche elettrostatiche) • 1 x connettore USB 3.1 Gen1 (supporto di 2 porte USB 3.1 Gen1) (supporto protezione da scariche elettrostatiche)
SO	Microsoft® Windows® 10 64 bit

** Per informazioni dettagliate sul prodotto, visitare il nostro sito Web: http://www.asrock.com*

Prestare attenzione al potenziale rischio previsto nella pratica di overclocking, inclusa la regolazione delle impostazioni nel BIOS, l'applicazione di tecnologia di Untied Overclocking o l'utilizzo di strumenti di overclocking di terze parti. L'overclocking può influenzare la stabilità del sistema o perfino provocare danni ai componenti e ai dispositivi del sistema. Occorre eseguirlo a proprio rischio e spese. Non ci riterremo responsabili per possibili danni provocati da overclocking.

Especificaciones

Plataforma	• Factor de forma Mini-ITX • Diseño de condensador sólido
CPU	• Compatible con la 8ª generación de procesadores Intel® Core™ (Socket 1151) • Digi Power design • Diseño de 5 fases de alimentación • Admite la tecnología Intel® Turbo Boost 2.0
Conjunto de chips	• Intel® H310
Memoria	• Tecnología de memoria DDR4 de doble canal • 2 x ranuras DIMM DDR4 • Admite memoria DDR4 2666/2400/2133 no ECC, sin búfer • Admite módulos de memoria UDIMM ECC (funcionamiento en modo no ECC) • Capacidad máxima de memoria del sistema: 32 GB • Admite Perfil de memoria extremo de Intel® (XMP) 2.0 • Contacto 15µ Gold en ranuras DIMM
Ranura de expansión	• 1 x ranura PCI Express 3.0 x16 (PCIE1:modo x16) * Admite unidad de estado sólido de NVMe como disco de arranque • 1 x Zócalo M.2 vertical (clave E) con el módulo WiFi-802.11ac integrado (en la E/S trasera)
Gráficos	* Intel® UHD Graphics Built-in Visuals y las salidas de VGA son compatibles únicamente con procesadores con GPU integrado. • Admite Intel® UHD Graphics Built-in Visuals: Intel® Quick Sync Video con AVC, MVC (S3D) y MPEG-2 Full HW Encode1, Intel® InTru™ 3D, Intel® Clear Video HD Technology, Intel® Insider™, Intel® UHD Graphics • DirectX 12 • Codificación y descodificación HWA: AVC/H.264, HEVC/H.265 8 bits, HEVC/H.265 10 bits, VP8, VP9 8 bits, VP9 10 bits (solo descodificar), MPEG2, MJPEG, VC-1 (solo descodificar) • Tres opciones de salida de gráficos: DVI-I, HDMI y DisplayPort 1.2 *Admite hasta 2 pantallas simultáneamente • Compatible con HDMI con una resolución máxima de 4K x 2K (4096x2160) a 30Hz • Compatible con DisplayPort 1.2 con una resolución máxima de 4K x 2K (4096x2304) a 60 Hz

	• Compatible con DVI-I con máxima resolución hasta 1920x1200 a 60Hz • Admite Sincronización automática entre audio y vídeo, color profundo (12 bpc), xvYCC y HBR (audio de alta tasa de bits) con puerto HDMI (se necesita un monitor compatible con HDMI) • Compatible con HDCP con puertos DVI-I, HDMI y DisplayPort 1.2 • Admite reproducción 4K Ultra HD (UHD) con los puertos HDMI y DisplayPort 1.2
Audio	• 7.1 Audio CH HD (Códec de audio Realtek ALC887) *Para configurar 7.1 Audio CH HD, deberá utilizar un módulo del panel frontal de audio HD y habilitar la característica de audio multicanal a través del controlador de audio. • Admite protección contra sobretensiones • Tapas de audio ELNA
LAN	• Gigabit LAN 10/100/1000 Mb/s • Giga PHY Intel® I219V • Admite la función Reactivación de LAN • Admite protección contra rayos y descargas electrostáticas (ESD) • Admite Ethernet 802.3az de eficiencia energética • Admite PXE
LAN inalámbrica	• Módulo WiFi Intel® 802.11ac • Compatible con IEEE 802.11a/b/g/n/ac • Compatible con Banda Dual (2,4/5 GHz) • Compatible con conexión inalámbrica de alta velocidad hasta 433 Mbps • Compatible con Bluetooth 4.2 / 3.0 + Alta velocidad clase II
E/S en panel posterior	• 2 x Puertos de antena • 1 x puerto de ratón/teclado PS/2 • 1 x puerto DVI-I • 1 x puerto HDMI • 1 x DisplayPort 1.2 • 2 x Puertos USB 2.0 (admite protección contra descargas electrostáticas) • 2 x Puertos USB 3.1 Gen1 (admite protección contra descargas electrostáticas) • 1 x Puerto LAN RJ-45 con LED (LED DE ACTIVIDAD/ENLACE y LED DE VELOCIDAD) • Conector de audio HD: Entrada de línea / Altavoz frontal / Micrófono

Almacenamiento	• 4 x conectores SATA3 de 6,0 Gb/s, compatibles con las funciones NCQ, AHCI y Conexión en caliente* * Si M2_1 se ocupa con un dispositivo M.2 de tipo SATA, SATA3_0 se deshabilitará. • 1 x Zócalo M.2 que admite el módulo SATA3 6,0 Gb/s M.2 de tipo 2280 con clave M y el módulo PCI Express M.2 hasta Gen2 x4 (20 Gb/s)** ** Admite unidad de estado sólido de NVMe como disco de arranque ** Admite el kit U.2 de ASRock
Conector	• 1 x cabezales de intrusión de chasis • 1 x Conector para ventilador de la CPU (4 contactos) * El conector para ventilador de la CPU admite ventilador de la CPU con una potencia de ventilador de 1 A (12 W) máxima. • 1 x Conector para ventilador de la chasis (4 contactos) * El conector para ventilador de la chasis admite ventilador de la chasis con una potencia de ventilador de 1 A (12 W) máxima. • 1 x Conector (4 contactos) para el ventilador de la bomba de agua/chasis (control de velocidad de ventilador inteligente) * El ventilador de la bomba de agua/chasis admite ventilador del disipador por agua con una potencia de ventilador máxima de 2 A (24 W). * CHA_FAN1/WP se pueden detectar automáticamente si se usa el ventilador de 3 o 4 contactos. • 1 x conector de alimentación ATX de 24 contactos • 1 x conector de alimentación de 12V de 8 contactos • 1 x Conector de audio en el panel frontal • 1 x base de conexiones USB 2.0 (admite 2 puertos USB 2.0). Admite protección contra descargas electrostáticas. • 1 x base de conexiones USB 3.1 Gen1 (admite 2 puertos USB 3.1 Gen1). Admite protección contra descargas electrostáticas.
SO	Microsoft® Windows® 10 64 bits

** Para obtener información detallada del producto, visite nuestro sitio Web: http://www.asrock.com*

Tenga en cuenta que hay un cierto riesgo implícito en las operaciones de overclocking, incluido el ajuste de la BIOS, aplicando la tecnología de overclocking liberada o utilizando las herramientas de overclocking de otros fabricantes. El overclocking puede afectar a la estabilidad del sistema e, incluso, dañar los componentes y dispositivos del sistema. Esta operación se debe realizar bajo su propia responsabilidad y usted debe asumir los costos. No asumimos ninguna responsabilidad por los posibles daños causados por el overclocking.

Технические характеристики

Платформа	• Форм-фактор Mini-ITX • Схема на основе твердотельных конденсаторов
ЦП	• Поддержка процессоров 8го поколения Intel® Core™ (Socket 1151) • Digi Power design • Система питания 5 • Поддерживается технология Intel® Turbo Boost 2.0
Чипсет	• Intel® H310
Память	• Двухканальная память DDR4 • 2 гнезда DDR4 DIMM • Поддерживаются модули небуферизованной памяти DDR4 2666/2400/2133 без ECC. • Поддержка модулей памяти ECC UDIMM (работа в режиме, отличном от ECC) • Максимальный объем ОЗУ: 32 ГБ • Поддерживается Intel® Extreme Memory Profile (XMP) 2.0 • Позолоченные (15 мкм) контакты слотов DIMM
Слот расширения	• 1 Слот PCI Express 3.0 x16 (PCIE1:режим x16) * Поддерживаются в качестве загрузочных SSD-диски типа NVMe. • 1 вертикальный слот M.2 (ключ E) с входящим в комплект поставки модулем WiFi-802.11ac (на задней панели ввода-вывода)
Графическая подсистема	* Встроенный видеоадаптер Intel® UHD Graphics и выходы VGA поддерживаются только при использовании ЦП со встроенными графическими процессорами. • Поддерживаемые встроенные технологии визуализации Intel® UHD Graphics: Intel® Quick Sync Video с полностью аппаратным кодированием1 в форматах AVC, MVC (S3D) и MPEG-2, Intel® InTru™ 3D, технология Intel® Clear Video HD, Intel® Insider™, Intel® UHD Graphics • DirectX 12 • Программно-аппаратное кодирование-декодирование: AVC/H.264, HEVC/H.265 8 бит, HEVC/H.265 10 бит, VP8, VP9 8 бит, VP9 10 бит (только декодирование), MPEG2, MJPEG, VC-1 (только декодирование) • Три видеовыхода: DVI-I, HDMI и DisplayPort 1.2 *Поддерживается вывод одновременно на 2 монитора • Поддержка HDMI с максимальным разрешением до 4K × 2K (4096x2160) при частоте обновления 30 Гц

	• Поддерживается DisplayPort 1.2 с максимальным разрешением до 4K × 2K (4096x2304) при 60 Гц • Поддержка DVI-I с максимальным разрешением до 1920x1200 при 60 Гц • Поддерживаются Auto Lip Sync, Deep Color (12 бит/цвет), xvYCC и HBR (High Bit Rate Audio) через порт HDMI (требуется соответствующий HDMI-монитор) • Поддержка функции HDCP через порты DVI-I, HDMI и DisplayPort 1.2 • Поддержка вывода видео с разрешением 4K Ultra HD (UHD) на порты HDMI и DisplayPort 1.2
Звук	• 7.1-канальный звук высокой четкости (аудиокодек Realtek ALC887) *Для настройки 7.1-канального звук высокой четкости HD Audio используйте переднюю аудиопанель HD и активируйте функцию многоканального звука в аудиодрайвере. • Защита от перепадов напряжения в электрической сети • Конденсаторы для аудиосистем ELNA
LAN	• Gigabit Ethernet 10/100/1000 Мбит/с • Giga PHY Intel® I219V • Поддерживается пробуждение по ЛВС • Молниезащита и защита от электростатических разрядов • Поддерживается Energy Efficient Ethernet 802.3az • Поддерживается PXE
Беспроводная ЛВС	• Модуль WiFi Intel® 802.11ac • Поддержка IEEE 802.11a/b/g/n/ac • Поддержка двух диапазонов (2,4/5 ГГц) • Поддержка высокоскоростного беспроводного подключения до 433 Мбит/с • Поддержка Bluetooth 4.2 / 3.0 + High speed class II
Порты ввода-вывода на задней панели	• 2 антенных порта • 1 порт PS/2 для мыши/клавиатуры • 1 Порт DVI-I • 1 порт HDMI • 1 порт DisplayPort 1.2 • 2 портов USB 2.0 (с защитой от электростатических разрядов) • 2 портов USB 3.1 Gen1 (с защитой от электростатических разрядов) • 1 порт ЛВС RJ-45 с индикаторами («Активность/Соединение» и «Скорость»)

	• Разъемы HD Audio: Линейный вход / передние динамики / микрофон
Запоминающие устройства	• 4 порта SATA3 6,0 Гбит/с, поддерживаются NCQ, AHCI и «горячая» замена* * Если слот M2_1 занят устройством M.2 типа SATA, интерфейс SATA3_0 будет отключен. • 1 слот M.2, поддерживается модуль M.2 SATA3 с ключом M типа 2280 с пропускной способностью 6,0 Гб/с и модуль M.2 PCI Express до версии Gen2 x4 (20 Гб/с)** ** Поддерживаются в качестве загрузочных SSD-диски типа NVMe ** Поддерживается комплект ASRock U.2.
Разъемы	• 1 Колодки для датчика вскрытия корпуса • 1 разъем для вентилятора охлаждения ЦП, 4-контактный * Разъем процессорного вентилятора поддерживает вентилятор с потребляемым током не более 1 A (12 Вт). • 1 разъем для вентилятора охлаждения корпусного(4-контактный) * Разъем корпусного вентилятора поддерживает вентилятор с потребляемым током не более 1 A (12 Вт). • 1 разъем для корпусного вентилятора или водяной помпы (4-контактный) (смарт-регулятор скорости вентилятора) * Разъем для корпусного вентилятора или водяной помпы поддерживает вентилятор с потребляемым током не более 2 A (24 Вт). * Для разъемов CHA_FAN1/WP автоматически определяется тип подключенного вентилятора: 3- или 4-контактный. • 1 разъем питания ATX, 24-контактный • 1 разъем питания 12 В, 8-контактный • 1 аудиоразъем на передней панели • 1 колодка USB 2.0 (2 порта USB 2.0 с защитой от электростатических разрядов) • 1 колодка USB 3.1 Gen1 (2 порта USB 3.1 Gen1) (с защитой от электростатических разрядов)
Операционные системы	Microsoft® Windows® 10 (64-разрядная)

** С дополнительной информацией об изделии можно ознакомиться на веб-сайте: http://www.asrock.com*

Следует учитывать, что разгон процессора, включая изменение настроек BIOS, применение технологии Untied Overclocking и использование инструментов разгона независимых производителей, сопряжен с определенным риском. Разгон процессора может снизить стабильность системы или даже привести к повреждению ее компонентов и устройств. Разгон процессора осуществляется пользователем на собственный риск и за собственный счет. Мы не несем ответственность за возможный ущерб, вызванный разгоном процессора.

Especificações

Plata-forma	• Formato Mini-ITX • Design de condensador sólido
CPU	• Suporta 8° Geraão de Processadores Intel® Core™ (Soquete 1151) • Digi Power design • Design com 5 fases de alimentação • Suporta a tecnologia Intel® Turbo Boost 2.0
Chipset	• Intel® H310
Memória	• Tecnologia de memória DDR4 de dois canais • 2 x Slots DIMM DDR4 • Suporta memória DDR4 2666/2400/2133, não ECC, sem memória intermédia • Suporta módulos de memória ECC UDIMM (opera em modo não-ECC) • Capacidade máxima da memória do sistema: 32GB • Suporta Extreme Memory Profile (XMP) 2.0 da Intel® • Contato em Ouro 15µ nos slots DIMM
Slot de expansão	• 1 x Slot PCI Express 3.0 x16 (PCIE1:modo x16) * Suporta NVMe SSD nos discos de inicialização • 1 x Soquete M.2 Vertical (Tecla E) com módulo Wi-Fi-802.11ac incluído (na E/S traseira)
Gráficos	* Os gráficos incorporados Intel® UHD e as saídas VGA só podem ser suportados com processadores com GPU integrada. • Suporta gráficos incorporados Intel® UHD: Intel® Quick Sync Video com AVC, MVC (S3D) e MPEG-2 Full HW Encode1, Intel® InTru™ 3D, Tecnologia Intel® Clear Video HD, Intel® Insider™, Gráficos Intel® UHD • DirectX 12 • HWAEncode/Decode: AVC/H.264, HEVC/H.265 8-bit, HEVC/H.265 10-bit, VP8, VP9 8-bit, VP9 10-bit (Decodificar apenas), MPEG2, MJPEG, VC-1 (Decodificar apenas) • Três opções de saída de gráficos: DVI-I, HDMI e DisplayPort 1.2 *Suporta até 2 monitores simultaneamente

	• Suporta HDMI com resolução máx. até 4K x 2K (4096x2160) @ 30Hz • Suporta DisplayPort 1.2 com resolução máx. até 4K x 2K (4096x2304) @ 60Hz • Suporta DVI-I com resolução máx. até 1920x1200 @ 60Hz • Suporta Auto sincronização labial, Deep Color (12bpc), xvYCC e HBR (High Bit Rate Audio) com porta HDMI (É necessário um monitor compatível com HDMI) • Suporta HDCP com Portas DVI-I, HDMI e DisplayPort 1.2 • Suporta reprodução HD Ultra (UHD) 4K com portas HDMI e DisplayPort 1.2
Áudio	• Áudio 7.1 CH HD com proteção de conteúdo (Codec de áudio Realtek ALC887) *Para configurar Áudio 7.1 CH HD, é necessário usar um módulo de áudio de painel frontal HD e habilitar o recurso de áudio multi-canal pelo driver de áudio. • Suporta Proteção de Sobretensão • Fones de Áudio ELNA
LAN	• LAN Gigabit a 10/100/1000 Mb/s • Giga PHY Intel® I219V • Suporta Wake-On-LAN • Oferece Suporte à Proteção de Relâmpago/ESD • Suporta Energy Efficient Ethernet 802.3az • Suporta PXE
LAN sem fios	• Módulo Intel® 802.11ac WiFi • Suporta IEEE 802.11a/b/g/n/ac • Suporta banda dupla (2,4/5 GHz) • Suporta conexão sem fio de alta velocidade até 433Mbps • Suporta Bluetooth 4.2 / 3.0 + Classe II de alta velocidade
E/S do painel posterior	• 2 x Portas de Antena • 1 x Porta PS/2 para mouse/teclado • 1 x porta DVI-I • 1 x Porta HDMI • 1 x DisplayPort 1.2 • 2 x Portas USB 2.0 (Suporta Proteção ESD) • 2 x Portas USB 3.1 Gen1 (Suporta Proteção ESD) • 1 x Porta LAN RJ-45 com LED (LED ACT/LINK e LED DE VELOCIDADE)

	• Fichas de áudio HD: Entrada de Linha / Autofalante Frontal / Microfone
Armazenamento	• 4 x Conectores SATA3 6,0 Gb/s, suporte NCQ, AHCI, Conector a Quente* * Se M2_1 é ocupado por um dispositivo tipo M2 SATA, SATA3_0 será desativado. • 1 x soquete M.2, suporta Chave M tipo 2280 módulo M.2 SATA3 6,0 Gb/s e módulo M.2 PCI Express até Gen2 x4 (20 Gb/s) ** ** Suporta NVMe SSD como discos de inicialização ** Suporta Kit ASRock U.2
Conector	• 1 x Suporte de intrusão do chassi • 1 x Conector da ventoinha da CPU (4 pinos) * O Conector do Ventilador de CPU suporta o ventilador de CPU de alimentação máxima 1A do ventilador (12W). • 1 x Conector da ventoinha da Chassi (4 pinos) * O Conector do Ventilador de Chassi suporta o ventilador de Chassi de alimentação máxima 1A do ventilador (12W). • 1 x Conector de Ventilador de Chassi/Ventilador da Bomba de Água (4 pinos) (Controle de Velocidade de Ventoinha Inteligente) * O Ventilador de Chassi/Ventilador da Bomba de Água suporta o ventilador de refrigerador a água de 2A máximo (24W) potência do ventilador. * CHA_FAN1/WP pode detectar automaticamente se ventoinha de 3 pinos ou 4 pinos está em uso. • 1 x Conector alimentação ATX 24 pinos • 1 x Conector de energia 8-pinos 12V • 1 x Conector de áudio do painel frontal • 1 x Plataforma USB 2.0 (Suporta 2 portas USB 2.0) (Suporta Proteção ESD) • 1 x Plataforma USB 3.1 Gen1 (Suporta 2 portas USB 3.1 Gen1) (Suporta Proteção ESD)
SO	Microsoft® Windows® 10 64-bit

** Para obter informações detalhadas sobre o produto, por favor, visite o nosso site: http://www.asrock.com*

Por favor, observe que existe um certo risco envolvendo overclocking, incluindo o ajuste das definições na BIOS, a aplicação de tecnologia Untied Overclocking ou a utilização de ferramentas de overclocking de terceiros. O overclocking poderá afetar a estabilidade do sistema ou mesmo causar danos nos componentes e dispositivos do seu sistema. Ele deve ser realizado por sua conta e risco. Não nos responsabilizamos por possíveis danos causados pelo overclocking.

Specyfikacje

Platforma	• Współczynnik kształtu Mini-ITX • Konstrukcja kondensatorami stałymi
CPU	• Obsługa 8-ej generacji procesorów Intel® Core™ (Socket 1151) • Digi Power design • Sekcja zasilania 5 Power Phase Design • Obsługa technologii Intel® Turbo Boost 2.0
Chipset	• Intel® H310
Pamięć	• Technologia pamięci Dual Channel DDR4 • 2 x gniazda DDR4 DIMM • Obsługa pamięci DDR4 2666/2400/2133 non-ECC, pamięć niebuforowana • Obsługa modułów pamięci ECC UDIMM (działanie w trybie non-ECC) • Maks. wielkość pamięci systemowej: 32GB • Obsługa Intel® Extreme Memory Profile (XMP) 2.0 • 15µ pozłacane styki w gniazdach DIMM
Gniazdo rozszerzenia	• 1 x gniazdo PCI Express 3.0 x16 (tryb PCIE1:x16) * Obsługa SSD NVMe, jako dysków rozruchowych • 1 x pionowe gniazdo M.2 (Key E) z wbudowanym modułem WiFi-802.11ac (z tyłu Wejścia/Wyjścia)
Grafika	* Wbudowana grafika Intel® UHD i wyjścia VGA są obsługiwane wyłącznie z procesorami, które mają zintegrowane GPU. • Obsługa wbudowanej grafiki Intel® UHD: Intel® Quick Sync Video z AVC, MVC (S3D) i MPEG-2 Full HW Encode1, Intel® InTru™ 3D, Intel® Clear Video HD Technology, Intel® Insider™, grafika Intel® UHD • DirectX 12 • Kodowanie/dekodowanie HWA: AVC/H.264, HEVC/H.265 8-bit, HEVC/H.265 10-bit, VP8, VP9 8-bit, VP9 10-bit (tylko dekodowanie), MPEG2, MJPEG, VC-1 (tylko dekodowanie) • Opcje trzech wyjść graficznych: DVI-I, HDMI i DisplayPort 1.2 • Obsługa trzech monitorów • Obsługa HDMI z maks. rozdzielczością do 4K x 2K (4096x2160) przy 30Hz

	• Obsługa DisplayPort 1.2 z maks. rozdzielczością do 4K x 2K (4096x2304) przy 60Hz • Obsługa DVI-I z maks. rozdzielczością do 1920x1200 przy 60Hz • Obsługa Auto Lip Sync, Deep Color (12bpc), xvYCC i HBR (High Bit Rate Audio) z portami HDMI (Wymagany monitor zgodny z HDMI) • Obsługa portów HDCP z DVI-I, HDMI i DisplayPort 1.2 • Obsługa odtwarzania 4K Ultra HD (UHD) z portami HDMI i DisplayPort 1.2
Audio	• Dźwięk HD 7.1 CH (kodek audio Realtek ALC887) * Aby skonfigurować dźwięk 7.1 CH HD wymagane jest użycie modułu panelu czołowego HD i włączenie funkcji dźwięku wielokanałowego za pośrednictwem sterownika audio. • Obsługa zabezpieczenia przed przepięciami • Nasadki audio ELNA
LAN	• Gigabit LAN 10/100/1000 Mb/s • Giga PHY Intel® I219V • Obsługa Wake-On-LAN • Obsługa zabezpieczenia przed wyładowaniami atmosferycznymi/ESD • Obsługa Energy Efficient Ethernet 802.3az • Obsługa PXE
Bezprzewodowa sieć LAN	• Moduł WiFi Intel® 802.11ac • Obsługa IEEE 802.11a/b/g/n/ac • Obsługa dwóch pasm (2,4/5 GHz) • Obsługa wysokiej szybkości połączeń bezprzewodowych do 433 Mbps • Obsługa Bluetooth 4.2 / 3.0 + Wysokiej szybkości klasa II
Tylny panel Wejścia/ Wyjścia	• 2 x porty anteny • 1 x port myszy/klawiatury PS/2 • 1 x port DVI-I • 1 x port HDMI • 1 x DisplayPort 1.2 • 2 x porty USB 2.0 (Obsługa zabezpieczenia ESD) • 2 x porty USB 3.1 Gen1 (Obsługa zabezpieczenia ESD) • 1 x port LAN RJ-45 z LED (LED ACT/LINK i LED SPEED) • Gniazda audio HD: Wejście liniowe / Głośnik przedni / Mikrofon

Przechowywanie	• 4 x złącza SATA3 6,0 Gb/s, obsługa NCQ, AHCI i Hot Plug* * Jeśli gniazdo M2_1 jest zajęte przez urządzenie M.2 typu SATA, zostanie wyłączone SATA3_0. • 1 x gniazdo M.2, obsługa M Key typu 2280 modułu M.2 SATA3 6,0 Gb/s i modułu M.2 PCI Express do Gen2 x4 (20 Gb/s)** ** Obsługa SSD NVMe, jako dysków rozruchowych ** Obsługa ASRock U.2 Kit
Złącze	• 1 x złącza główkowe funkcji naruszenia obudowy • 1 x złącze wentylatora CPU (4-pinowe) * Złącze wentylatora CPU obsługuje wentylator CPU maksymalnym prądem zasilania wentylatora 1A (12W). • 1 x złącze wentylatora obudowy (4-pinowe) * Złącze wentylatora obudowy obsługuje wentylator obudowy maksymalnym prądem zasilania wentylatora 1A (12 W). • 1 x złącza wentylatora obudowy/pompy wodnej (4-pinowe) (Inteligentne sterowanie prędkością obrotową wentylatora) * Złącze wentylatora obudowy/pompy wodnej obsługuje wentylator układu chłodzenia maksymalnym prądem zasilania wentylatora 2A (24W). * CHA_FAN1/WP może automatycznie wykrywać, jeśli używany jest wentylator 3-pinowy lub 4-pinowy. • 1 x 24 pinowe złącze zasilania ATX • 1 x 8 pinowe złącze zasilania 12 V • 1 x złącze audio na panelu przednim • 1 x złącza główkowe USB 2.0 (obsługuje 2 porty USB 2.0) (Obsługa zabezpieczenia ESD) • 1 x porty główkowe USB 3.1 Gen1 (obsługa 2 portów USB 3.1 Gen1) (obsługa zabezpieczenia ESD)
System operacyjny	Microsoft® Windows® 10 64-bitowy

** Dla uzyskania szczegółowej informacji o produkcie, należy odwiedzić naszą stronę internetową: http://www.asrock.com*

Należy pamiętać, że przetaktowywanie jest związane z pewnym ryzykiem, włącznie z regulacją ustawień w BIOS, zastosowaniem Untied Overclocking Technology lub używaniem narzędzi przetaktowywania innych firm. Przetaktowywanie może wpływać na stabilność systemu lub nawet powodować uszkodzenie komponentów i urządzeń systemu. Powinno to zostać zrobione na własne ryzyko i koszt. Nie odpowiadamy za możliwe uszkodzenia spowodowane przetaktowywaniem.

규격

플랫폼	• Mini-ITX 폼 팩터 • 솔리드 콘덴서 구조
CPU	• 8 세대 Intel® Core™ 프로세서 지원 (소켓 1151) • Digi Power design • 5 개 전원 위상 구조 • Intel® Turbo Boost 2.0 기술 지원
칩세트	• Intel® H310
메모리	• 듀얼 채널 DDR4 메모리 기술 • DDR4 DIMM 슬롯 2 개 • DDR4 2666/2400/2133 비 ECC, 비버퍼링 메모리 지원 • ECC UDIMM 메모리 모듈 (비 -ECC 모드에서 작동함) 지원 • 시스템 메모리 최대 용량 : 32GB • Intel® Extreme Memory Profile (XMP) 2.0 지원 • DIMM 슬롯에 15 μ Gold Contact 장착
확장 슬롯	• PCI Express 3.0 x16 슬롯 1 개 (PCIE1:x16 모드) * NVMe SSD 를 부팅 디스크로 사용 가능하도록 지원 • 수직 M.2 소켓 (키 E) 1 개 (번들로 제공되는 후면 I/O 의 WiFi-802.11ac 모듈 포함)
그래픽	* Intel® UHD 그래픽스 빌트 - 인 비주얼과 VGA 출력은 GPU 통합 프로세서로만 지원할 수 있습니다 . • Intel® UHD 그래픽스 빌트 - 인 비주얼 지원 : AVC, MVC (S3D) 및 MPEG-2 풀 HW Encode1 지원 Intel® Quick Sync Video, Intel® InTru™ 3D, Intel® 클리어 비디오 HD 기술 , Intel® Insider™, Intel® UHD 그래픽스 • DirectX 12 • HWA 인코드 / 디코드 : AVC/H.264, HEVC/H.265 8- 비트 , HEVC/H.265 10- 비트 , VP8, VP9 8- 비트 , VP9 10- 비트 (디코딩 전용), MPEG2, MJPEG, VC-1 (디코딩 전용) • 그래픽 출력 옵션 세 개 : DVI-I, HDMI 및 DisplayPort 1.2 * 최대 2 개의 디스플레이를 동시에 지원 • HDMI 지원 (최대 해상도 4K x 2K (4096x2160) @ 30Hz) • DisplayPort 1.2 지원 (최대 해상도 4K x 2K (4096x2304) @ 60Hz)

- DVI-I 지원 (최대 해상도 1920x1200 @ 60Hz)
- Auto Lip Sync, Deep Color (12bpc), xvYCC 및 HBR (High Bit Rate Audio)(HDMI 포트 포함) 지원 (HDMI 호환 모니터 필요)
- DVI-I, HDMI 및 DisplayPort 1.2 포트를 이용한 HDCP 지원
- HDMI 및 DisplayPort 1.2 포트를 이용한 4K Ultra HD(UHD) 재생 지원

오디오

- 7.1 CH HD 오디오 (Realtek ALC887 오디오 코덱)

* 7.1 CH HD 오디오를 구성하려면 HD 전면 패널 오디오 모듈을 사용하고 다채널 오디오 기능을 오디오 드라이버로 활성화해야 합니다 .

- 서비 보호 지원
- ELNA 오디오 캡

LAN

- Gigabit LAN 10/100/1000 Mb/s
- Giga PHY Intel® I219V
- Wake-On-LAN 지원
- 번개 /ESD 보호 지원
- 절전형 이더넷 802.3az 지원
- PXE 지원

무선 LAN

- Intel® 802.11ac WiFi 모듈
- IEEE 802.11a/b/g/n/ac 지원
- 듀얼 밴드 (2.4/5 GHz) 지원
- 최대 433Mbps 의 고속 무선 연결 지원
- Bluetooth 4.2 / 3.0 + 고속 클래스 II 지원

후면 패널 I/O

- 안테나 포트 2 개
- PS/2 마우스 / 키보드 포트 1 개
- DVI-I 포트 1 개
- HDMI 포트 1 개
- DisplayPort 1.2 1 개
- USB 2.0 포트 2 개 (ESD 보호 지원)
- USB 3.1 Gen1 포트 2 개 (ESD 보호 지원)
- LED 장착 RJ-45 LAN 포트 1 개 (ACT/LINK LED 및 SPEED LED)
- HD 오디오 잭 : 라인 입력 / 전면 스피커 / 마이크

저장 장치	• SATA3 6.0 Gb/s 커넥터 4 개 , NCQ, AHCI 및 " 핫 플러그 " 지원 * * SATA- 타입 M.2 장치에서 M2_1 을 사용 중이면 , SATA3_0 이 비활성화됩니다 . • M.2 소켓 1 개 , M 키 타입 2280 M.2 SATA3 6.0 Gb/s 모듈 지원 및 Gen2 까지의 M.2 PCI Express 모듈 4 개 지원 (20 Gb/s)** ** NVMe SSD 를 부팅 디스크로 사용 가능하도록 지원 ** ASRock U.2 키트 지원
커넥터	• 섀시 침입 헤더 1 개 • CPU 팬 커넥터 (4 핀) 1 개 * CPU 팬 커넥터는 팬 전력이 최대 1A(12W) 인 CPU 팬을 지원합니다 . • 섀시 팬 커넥터 (4 핀) 1 개 * 섀시 팬 커넥터는 팬 전력이 최대 1A(12W) 인 섀시 팬을 지원합니다 . • 섀시 / 워터 펌프 팬 커넥터 (4 핀) 1 개 (스마트 팬 속도 제어) * 섀시 / 워터 펌프 팬은 팬 전력이 최대 2A(24W) 인 수냉식 쿨러 팬을 지원합니다 . * 3 핀 또는 4 핀 팬이 사용 중인 경우 , CHA_FAN1/WP 가 자동으로 감지할 수 있습니다 . • 24 핀 ATX 전원 커넥터 1 개 • 8 핀 12V 전원 커넥터 1 개 • 전면 패널 오디오 커넥터 1 개 • USB 2.0 헤더 1 개 (USB 2.0 포트 2 개 지원) (ESD 보호 지원) • USB 3.1 Gen1 헤더 1 개 (USB 3.1 Gen1 포트 2 개 지원) (ESD 보호 지원)
OS	Microsoft® Windows® 10 64 비트

** 자세한 제품 정보에 대해서는 당사 웹사이트를 참조하십시오 : http://www.asrock.com*

BIOS 설정을 조정하거나 Untied Overclocking Technology 를 적용하거나 타업체의 오버클로킹 도구를 사용하는 것을 포함하는 오버클로킹에는 어느 정도의 위험이 따른다는 것을 유념하십시오 . 오버클로킹은 시스템 안정성에 영향을 주거나 심지어 시스템의 구성 요소와 장치에 손상을 입힐 수도 있습니다 . 오버클로킹은 사용자 스스로 위험과 비용을 감수하고 해야 합니다 . 당사는 오버클로킹에 의해 발생할 수 있는 손상에 대해서 책임이 없습니다 .

仕様

プラットフォーム	• Mini-ITX フォームファクター • 固体コンデンサ設計
CPU	• 第 8 世代 Intel® Core™ プロセッサーに対応（ソケット 1151） • デジタル電源設計 • 5 電源フェーズ設計 • Intel® ターボブースト 2.0 テクノロジーをサポート
チップセット	• Intel® H310
メモリ	• デュアルチャンネル DDR4 メモリ機能 • 2 x DDR4 DIMM スロット • DDR4 2666/2400/2133 ノン ECC、アンバッファードメモリに対応 • ECC UDIMM メモリモジュールに対応（non-ECC モードで動作） • システムメモリの最大容量：32GB • Intel® エクストリームメモリプロファイル（XMP）2.0 に対応 • DIMM スロットに 15 μゴールドコンタクトを採用
拡張スロット	• 1 x PCI Express 3.0 x16 スロット（PCIE1：x16 モード） * 起動ディスクとして NVMe SSD に対応 • 1 x 垂直 M.2 ソケット（Key E）、WiFi-802.11ac モジュールがバンドルされています（リア I/O）
グラフィックス	* Intel® UHD グラフィックス内蔵ビジュアルおよび VGA 出力は、GPU に統合されたプロセッサーのみでサポートされます。 • Intel® UHD グラフィックス内蔵ビジュアルをサポート：AVC、MVC (S3D) および MPEG-2 Full HW Encode1 が装備された Intel® クイック・シンク・ビデオ、Intel® InTru™ 3D, Intel® クリアー・ビデオ HD テクノロジー、Intel® Insider™, Intel® UHD グラフィックス • DirectX 12 • HWA エンコード / デコード : AVC/H.264、HEVC/H.265 8-ビット、HEVC/H.265 10- ビット、VP8、VP9 8- ビット、VP9 10-ビット (デコードのみ)、MPEG2、MJPEG、VC-1 (デコードのみ) • 3 つのグラフィックス出力オプション : DVI-I、HDMI、DisplayPort 1.2 * 最大 2 台のディスプレイを同時に対応します

日本語

- HDMI に対応、最大解像度 4K x 2K (4096x2160) @ 30Hz
- DisplayPort 1.2 テクノロジーに対応、最大解像度 4K x 2K (4096x2304) @ 60Hz
- DVI-I をサポート、最大解像度 1920x1200 @60Hz
- HDMI ポートでオートリップシンク、ディープカラー(12bpc)、xvYCC、および、HBR(高ビットレートオーディオ)に対応(HDMI 対応モニターが必要です)
- DVI-I、HDMI、DisplayPort 1.2 ポートで HDCP に対応
- HDMI ポートと DisplayPort 1.2 ポートで 4K Ultra HD(UHD)再生に対応

オーディオ

- 7.1 CH HD オーディオ (Realtek ALC887 Audio Codec)

*7.1 CH HD オーディオを設定するためには、HD フロントパネルのオーディオモジュールを使用し、オーディオドライバを通してマルチチャンネルオーディオ機能を有効にする必要があります。

- サージ保護に対応
- ELNA 製オーディオコンデンサ

LAN

- ギガビット LAN 10/100/1000 Mb/s
- ギガ PHY Intel® I219V
- Wake-On-LAN(ウェイク オン ラン)に対応
- 雷 / 静電気放電(ESD)保護に対応
- エネルギー効率のよいイーサネット 802.3az をサポート
- PXE をサポート

ワイヤレス LAN

- Intel® 802.11ac WiFi モジュール
- IEEE 802.11a/b/g/n/ac をサポート
- デュアルバンド(2.4/5 GHz)をサポート
- 最高 433 Mbps の高速ワイヤレス接続をサポート
- ブルートゥース 4.2/3.0 + ハイスピードクラス II をサポート

リアパネル I/O

- 2 x アンテナポート
- 1 x PS/2 マウス / キーボードポート
- 1 x DVI-I ポート
- 1 x HDMI ポート
- 1 x DisplayPort 1.2
- 2 x USB 2.0 ポート(静電気放電(ESD)保護に対応)
- 2 x USB 3.1 Gen1 ポート(静電気放電(ESD)保護に対応)

- 1 x LED 付き RJ-45 LAN ポート(ACT/LINK LED と SPEED LED)
- HD オーディオジャック : ラインイン / フロントスピーカー / マイク

ストレージ

- 4 x SATA3 6.0 Gb/s コネクタ、NCQ、AHCI、および、ホットプラグ機能に対応 *

* SATA タイプ M.2 デバイスで M2_1 を使用している場合は、SATA3_0 は無効になります。

- 1 x M.2 ソケット、M Key タイプ 2280 M.2 SATA3 6.0 Gb/s モジュール、および、最大 Gen2 x4 (20 Gb/s) までの M.2 PCI Express モジュールに対応 **

** 起動ディスクとして NVMe SSD に対応
** ASRock U.2 キットに対応

コネクタ

- 1 x シャーシイントルージョンヘッダー
- 1 x CPU ファンコネクタ(4 ピン)

* CPU ファンコネクタは最大 1A (12W) の電力の CPU ファンに対応します。

- 1 x シャーシ ファンコネクタ(4 ピン)

* シャーシ ファンコネクタは最大 1A (12W) の電力の シャーシ ファンに対応します。

- 1 x シャーシ / ウォーターポンプファンコネクタ(4 ピン)(スマートファン速度制御)

* シャーシ / ウォーターポンプファンは最大 2A (24W) の出力のウォータークーラーに対応します。
* CHA_FAN1/WP は 3 ピンまたは 4 ピンファンが使用されているかどうかを自動検出できます。

- 1 x 24 ピン ATX 電源コネクタ
- 1 x 8 ピン 12V 電源コネクタ
- 1 x 前面パネルオーディオコネクタ
- 1 x USB 2.0 ヘッダー(2 つの USB 2.0 ポートに対応)(静電気放電(ESD)保護に対応)
- 1 x USB 3.1 Gen1 ヘッダー(2 つの USB 3.1 Gen1 ポートに対応)(静電気放電(ESD)保護に対応)

OS

Microsoft® Windows® 10 64-bit

** 商品詳細については、当社ウェブサイトをご覧ください。http://www.asrock.com*

BIOS 設定の調整、アンタイドオーバークロックテクノロジーの適用、サードパーティのオーバークロックツールの使用などを含む、オーバークロックには、一定のリスクを伴いますのでご注意ください。オーバークロックするとシステムが不安定になったり、システムのコンポーネントやデバイスが破損することがあります。ご自分の責任で行ってください。弊社では、オーバークロックによる破損の責任は負いかねますのでご了承ください。

日本語

规格

平台	• Mini-ITX 规格尺寸 • 稳固的电容器设计
CPU	• 支持第 8 代 Intel® Core™ 处理器（插座 1151） • Digi Power design • 5 电源相设计 • 支持 Intel® Turbo Boost 2.0 技术
芯片集	• Intel® H310
内存	• 双通道 DDR4 内存技术 • 2 x DDR4 DIMM 槽 • 支持 DDR4 2666/2400/2133 非 ECC，非缓冲内存 • 支持 ECC UDIMM 内存模块（非 ECC 模式操作） • 支持系统内存最大容量： 32GB • 支持 Intel® Extreme Memory Profile (XMP) 2.0 • DIMM 插槽中 15 μ 金触点
扩充槽	• 1 x PCI Express 3.0 x16 插槽（PCIE1：x16 模式) * 支持 NVMe SSD 用作启动盘 • 1 x 垂直 M.2 Socket (Key E)，捆绑有 WiFi-802.11ac 模块（在后 I/O 上）
图形	* 只有 GPU 集成的处理器才支持 Intel® UHD Graphics 内置视效和 VGA 输出。 • 支持 Intel® UHD Graphics 内置视效 : Intel® 快速同步视频，采用 AVC、MVC (S3D) 和 MPEG-2 Full HW Encode1、Intel® InTru™ 3D、Intel® Clear Video HD 技术、Intel® Insider™、Intel® UHD Graphics • DirectX 12 • HWA 编码 / 解码 : AVC/H.264、HEVC/H.265 8-bit、HEVC/H.265 10-bit、VP8、VP9 8-bit、VP9 10-bit (仅解码)、MPEG2、MJPEG、VC-1 (仅解码) • 3 个图形输出选项： DVI-I、HDMI 和 DisplayPort 1.2 * 同时最多支持两个 2 显示器

简体中文

- 支持 HDMI，30Hz 时最大分辨率可达 4K x 2K (4096x2160)
- 支持 DisplayPort 1.2，60Hz 时最大分辨率达 4K x 2K (4096x2304)
- 支持 DVI-I，60Hz 时最大分辨率达 1920x1200
- 通过 HDMI 端口（需要兼容的 HDMI 显示器）支持 Auto Lip Sync、Deep Color (12bpc), xvYCC 和 HBR（高位速率音频）
- 通过 DVI-I、HDMI 和 DisplayPort 1.2 端口支持 HDCP
- 通过 HDMI 和 DisplayPort 1.2 端口支持支持 4K 超高清 (UHD) 播放

音频

- 7.1 CH 高清音频 (Realtek ALC887 音频编解码器)

* 要配置 7.1 CH 高清音频，需要使用高清前面板模块和通过音频驱动程序启用多通道音频功能。

- 支持电涌保护
- ELNA 音频电容

LAN

- Gigabit LAN 10/100/1000 Mb/s
- Giga PHY Intel® I219V
- 支持 Wake-On-LAN（网上唤醒）
- 支持雷电 /ESD 保护
- 支持高能效以太网 802.3az
- 支持 PXE

无线 LAN

- Intel® 802.11ac WiFi 模块
- 支持 IEEE 802.11a/b/g/n/ac
- 支持双频段 (2.4/5 GHz)
- 支持最高 433Mbps 的高速无线连接
- 支持 Bluetooth 4.2 / 3.0 + 高速 Class II

后面板 I/O

- 2 x 天线端口
- 1 x PS/2 鼠标 / 键盘端口
- 1 x DVI-I 端口
- 1 x HDMI 端口
- 1 x DisplayPort 1.2
- 2 x USB 2.0 端口 (支持 ESD 保护)
- 2 x USB 3.1 Gen1 端口 (支持 ESD 保护)
- 1 x RJ-45 LAN 端口，带 LED（ACT/LINK LED 和 SPEED LED）
- 高清音频插孔 : 线路输入 / 前扬声器 / 麦克风

存储	• 4 x SATA3 6.0 Gb/s 接口，支持 NCQ、AHCI 和热插拔 * * 如果 M2_1 被 SATA 型 M.2 设备占用，SATA3_0 将被禁用。 • 1 x M.2 接口，支持 M Key 类型 2280 M.2 SATA3 6.0 Gb/s 模块和 M.2 PCI Express 模块（最高 Gen2 x4 (20 Gb/s)）** ** 支持 NVMe SSD 用作启动盘 ** 支持华擎 U.2 套件
接口	• 1 x 机箱侵入接脚 • 1 x CPU 风扇接口 (4 针) * CPU 风扇接口支持最高 1A (12W) 功率的 CPU 风扇。 • 1 x 机箱风扇接口 (4 针) * 机箱风扇接口支持最高 1A (12W) 功率的机箱风扇。 • 1 x 机箱 / 水泵风扇接口（4 针）（智能风扇速度控制） * 机箱 / 水泵风扇支持最高 2A (24W) 功率的水冷风扇。 * CHA_FAN1/WP 可以自动检测 3 针脚或 4 针脚风扇是否在使用。 • 1 x 24 针 ATX 电源接口 • 1 x 8 针 12V 电源接口 • 1 x 前面板音频接口 • 1 x USB 2.0 接脚（支持 2 个 USB 2.0 端口，支持 ESD 保护） • 1 x USB 3.1 Gen1 接脚（支持 2 个 USB 3.1 Gen1 端口，支持 ESD 保护）
操作系统	Microsoft® Windows® 10 64-bit

** 有关详细产品信息，请访问我们的网站：* http://www.asrock.com

须认识到超频会有一定风险，包括调整 BIOS 设置，应用“自由超频技术”，或使用第三方超频工具。超频可能会影响到系统的稳定性，甚至对系统的组件和设备造成损坏。执行这项工作您应自担风险和自己承担费用。我们对由于超频而造成的损坏概不负责。

电子信息产品污染控制标示

依据中国发布的「电子信息产品污染控制管理办法」及 SJ/T 11364-2006「电子信息产品污染控制标示要求」，电子信息产品应进行标示，藉以向消费者揭露产品中含有的有毒有害物质或元素不致发生外泄或突变从而对环境造成污染或对人身、财产造成严重损害的期限。依上述规定，您可于本产品之印刷电路板上看见图一之标示。图一中之数字为产品之环保使用期限。由此可知此主板之环保使用期限为 10 年。

图一

有毒有害物质或元素的名称及含量说明

若您欲了解此产品的有毒有害物质或元素的名称及含量说明，请参照以下表格及说明。

部件名称	有害物质或元素					
	铅 (Pb)	镉 (Cd)	汞 (Hg)	六价铬 (Cr(VI))	多溴联苯 (PBB)	多溴二苯醚 (PBDE)
印刷电路板及电子组件	X	O	O	O	O	O
外部信号连接头及线材	X	O	O	O	O	O

O: 表示该有毒有害物质在该部件所有均质材料中的含量均在 SJ/T 11363-2006 标准规定的限量要求以下。

X: 表示该有毒有害物质至少在该部件的某一均质材料中的含量超出 SJ/T 11363-2006 标准规定的限量要求，然该部件仍符合欧盟指令 2002/95/EC 的规范。

备注 : 此产品所标示之环保使用年限，系指在一般正常使用状况下。

規格

平台	• Mini-ITX 尺寸 • 固態電容設計
CPU	• 支援第 8 代 Intel® Core™ 處理器 (Socket 1151) • Digi Power design • 5 電源相位設計 • 支援 Intel® Turbo Boost 2.0 技術
晶片組	• Intel® H310
記憶體	• 雙通道 DDR4 記憶體技術 • 2 x DDR4 DIMM 插槽 • 支援 DDR4 2666/2400/2133 非 ECC 無緩衝記憶體 • 支援 ECC UDIMM 記憶體模組 (於非 ECC 模式下運作) • 最大系統記憶體容量： 32GB • 支援 Intel® Extreme Memory Profile (XMP) 2.0 • 15 μ 特厚鍍金插槽
擴充插槽	• 1 x PCI Express 3.0 x16 插槽（PCIE1：x16 模式) * 支援 NVMe SSD 作為開機磁碟 • 1 x 垂直 M.2 插座 (Key E)，搭售 WiFi-802.11ac 模組 (在背後 I/O 上)
顯示卡	* 僅限整合 GPU 的處理器才可支援 Intel® UHD Graphics Built-in Visuals 及 VGA 輸出。 • 支援 Intel® UHD Graphics Built-in Visuals： 轉換 AVC、MVC (S3D) 及 MPEG-2 Full HW Encode1 的 Intel® 高速影像同步轉檔技術、Intel® InTru™ 3D, Intel® Clear Video HD Technology、Intel® Insider™、Intel® UHD Graphics • DirectX 12 • HWA 編碼 / 解碼： AVC/H.264, HEVC/H.265 8 位元、HEVC/H.265 10 位元、VP8, VP9 8 位元、VP9 10 位元 (僅解碼)、MPEG2、MJPEG、VC-1 (僅解碼) • 三個圖形輸出選項： DVI-I、HDMI 及 DisplayPort 1.2 * 最高同時支援 2 台顯示器 • 支援最高可達 4K x 2K (4096x2160) @ 30Hz 解析度的 HDMI

- 支援最高可達 4K x 2K (4096x2304) @ 60Hz 解析度的 DisplayPort 1.2
- 支援最高可達 1920x1200 @ 60Hz 解析度的 DVI-I
- 支援使用 HDMI 連接埠（需相容於 HDMI 監視器）的 Auto Lip Sync、Deep Color (12bpc)、xvYCC 及 HBR（高位元率音訊）
- 支援含 DVI-I、HDMI 及 DisplayPort 1.2 連接埠的 HDCP
- 支援使用 HDMI 與 DisplayPort 1.2 連接埠進行 4K Ultra HD (UHD) 播放

音訊

- 7.1 CH HD 音訊 (Realtek ALC887 音訊轉碼器)

* 若要設定 7.1 CH HD 音訊，必須使用 HD 前面板音訊模組，並透過音訊驅動程式啟用多聲道音訊功能。

- 支援突波保護
- ELNA 音響級電容

LAN

- Gigabit LAN 10/100/1000 Mb/s
- Giga PHY Intel® I219V
- 支援網路喚醒
- 支援雷擊／靜電保護
- 支援 Energy Efficient Ethernet 802.3az
- 支援 PXE

無線 LAN

- Intel® 802.11ac WiFi 模組
- 支援 IEEE 802.11a/b/g/n/ac
- 支援雙頻 (2.4/5 GHz)
- 支援高達 433Mbps 的高速無線連線
- 支援 Bluetooth 4.2 / 3.0 + 高速級別 II

後面板 I/O

- 2 x 天線連接埠
- 1 x PS/2 滑鼠／鍵盤連接埠
- 1 x DVI-I 連接埠
- 1 x HDMI 連接埠
- 1 x DisplayPort 1.2
- 2 x USB 2.0 連接埠（支援靜電保護）
- 2 x USB 3.1 Gen1 連接埠（支援靜電保護）
- 1 x RJ-45 LAN 連接埠，含 LED（ACT/LINK LED 及 SPEED LED）
- HD 音訊插孔： 線路輸入／前置喇叭／麥克風

儲存裝置	• 4 x SATA3 6.0 Gb/s 接頭，支援 NCQ、AHCI 及「熱插拔」* * 若 M2_1 為 SATA 類型的 M.2 裝置佔用，將會停用 SATA3_0。 • 1 x Ultra M.2 插座，支援 M Key 型 2280 M.2 SATA3 6.0 Gb/s 模組與 M.2 PCI Express 模組（最高可達 Gen2 x4 (20 Gb/s)）類型 ** ** 支援 NVMe SSD 作為開機磁碟 ** 支持華擎 U.2 套件
接頭	• 1 x 機殼防護排針 • 1 x CPU 風扇接頭 (4-pin) * CPU 風扇接頭支援最高 1A (12W) 風扇功率的 CPU 風扇。 • 1 x 機殼風扇接頭 (4-pin) * 機殼風扇接頭支援最高 1A (12W) 風扇功率的機殼風扇。 • 1 x 機殼／水冷幫浦風扇接頭 (4-pin)（智慧型風扇速度控制） * 機殼／水冷幫浦風扇接頭支援最高 2A (24W) 風扇功率的水冷風扇。 * 如果 3-pin 或 4-pin 風扇使用中，可自動偵測 CHA_FAN1/WP。 • 1 x 24 pin ATX 電源接頭 • 1 x 8 pin 12V 電源接頭 • 1 x 前面板音訊接頭 • 1 x USB 2.0 排針（支援 2 個 USB 2.0 連接埠）（支援靜電保護） • 1 x USB 3.1 Gen1 排針（支援 2 個 USB 3.1 Gen1 連接埠）（支援靜電保護）
作業系統	Microsoft® Windows® 10 64-bit

** 如需產品詳細資訊，請上我們的網站： http://www.asrock.com*

請務必理解，超頻可能產生某種程度的風險，其中包括調整 BIOS 中的設定、採用自由超頻技術或使用協力廠商的超頻工具。超頻可能會影響您系統的穩定性，或者甚至會對您系統的元件及裝置造成傷害。您應自行負擔超頻風險及成本。我們對於因超頻所造成的可能損害概不負責。

Spesifikasi

Platform	• Bentuk dan Ukuran Mini-ITX • Desain Kapasitor Solid
CPU	• Mendukung Prosesor Generasi ke-8 Intel® Core™ (Soket 1151) • Desain Digi Power • Desain 5 Fase Daya • Mendukung Teknologi Intel® Turbo Boost 2.0
Chipset	• Intel® H310
Memori	• Teknologi Memori DDR4 Dua Saluran • 2 x Slot DIMM DDR4 • Mendukung DDR4 2666/2400/2133 non-ECC, memori tanpa buffer • Mendukung modul memori ECC UDIMM (berjalan dalam mode non-ECC) • Kapasitas maksimum memori sistem: 32GB • Mendukung Intel® Extreme Memory Profile (XMP) 2.0 • 15µ Bidang Kontak Berwarna Emas di Slot DIMM
Slot Ekspansi	• 1 x Slot PCI Express 3.0 x16 (PCIE1:x16 mode) * Mendukung SSD NVMe sebagai disk boot • 1 x Soket M.2 Vertikal (tombol E) dengan paket modul WiFi-802.11ac (di bagian belakang I/O)
Grafis	* Intel® UHD Graphics Built-in Visuals dan output VGA hanya didukung dengan prosesor yang terintegrasi GPU. • Mendukung Intel® UHD Graphics Built-in Visuals: Intel® Quick Sync Video dengan AVC, MVC (S3D) dan MPEG-2 Full HW Encode1, Intel® InTru™ 3D, Intel® Clear Video HD Technology, Intel® Insider™, Intel® UHD Graphics • DirectX 12 • Encode/Decode HWA: AVC/H.264, HEVC/H.265 8-bit, HEVC/H.265 10-bit, VP8, VP9 8-bit, VP9 10-bit (hanya Decode), MPEG2, MJPEG, VC-1 (hanya Decode) • Tiga pilihan output grafis: DVI-I, HDMI, dan DisplayPort 1.2 *Mendukung hingga 2 tampilan secara bersamaan • Mendukung HDMI dengan resolusi maksimum hingga 4K x 2K (4096x2160) @ 30Hz

	• Mendukung DisplayPort 1.2 dengan resolusi maksimum hingga 4K x 2K (4096x2304) @ 60Hz • Mendukung DVI-I dengan resolusi maksimum hingga 1920x1200 @ 60Hz • Mendukung Auto Lip Sync, Kedalaman Warna (12bpc), xvYCC, dan HBR (Audio High Bit Rate) dengan Port HDMI (memerlukan monitor yang kompatibel dengan HDMI) • Mendukung HDCP dengan Port DVI-I, HDMI, dan DisplayPort 1.2 • Mendukung pemutaran Ultra HD 4K (UHD) dengan Port HDMI dan DisplayPort 1.2
Audio	• Audio HD 7.1 CH (Realtek ALC887 Audio Codec) * Untuk mengkonfigurasi Audio HD 7.1 CH, modul audio panel depan HD harus digunakan dan fitur audio multisaluran harus diaktifkan melalui driver audio. • Mendukung Perlindungan dari Lonjakan Arus • ELNA Audio Caps
LAN	• Gigabit LAN 10/100/1000 Mb/s • Giga PHY Intel® I219V • Mendukung Wake-On-LAN • Mendukung Perlindungan dari Petir/ESD • Mendukung Ethernet Hemat Energi 802.3az • Mendukung PXE
LAN Nirkabel	• Intel® 802.11ac WiFi Modul • Mendukung IEEE 802.11a/b/g/n/ac • Mendukung Dual-Band (2,4/5 GHz) • Mendukung Sambungan nirkabel berkecepatan tinggi hingga 433Mbps • Mendukung Bluetooth 4.2 / 3.0 + Kecepatan tinggi kelas II
I/O Panel Belakang	• 2 x Port Antena • 1 x Port Mouse/Keyboard PS/2 • 1 x Port DVI-I • 1 x Port HDMI • 1 x DisplayPort 1.2 • 2 x Port USB 2.0 (Mendukung Perlindungan dari ESD) • 2 x Port USB 3.1 Gen1 (Mendukung Perlindungan dari ESD)

	• 1 x Port LAN RJ-45 dengan LED (LED ACT/LINK dan LED SPEED) • Soket Audio HD: Saluran Masuk/Speaker Depan/Mikrofon
Penyimpanan	• 4 x Konektor SATA3 6,0 Gb/s, mendukung NCQ, AHCI, dan Hot Plug* * Jika M2_1 digunakan perangkat SATA tipe M.2, maka SATA3_0 akan dinonaktifkan. • 1 x Soket M.2, mendukung modul M Key tipe 2280 M.2 SATA3 6,0 Gb/s dan modul M.2 PCI Express hingga Gen2 x4 (20 Gb/s)** ** Mendukung SSD NVMe sebagai disk boot ** Mendukung Kit ASRock U.2
Konektor	• 1 x Header Chassis Intrusion • 1 x Konektor Kipas CPU (4-pin) * Konektor Kipas CPU mendukung kipas CPU dengan daya kipas maksimum 1A (12W). • 1 x Konektor Kipas Sasis (4-pin) * Konektor Kipas Sasis mendukung kipas Sasis dengan daya kipas maksimum 1A (12W). • 1 x Konektor Sasis/Kipas Pompa Air (4-pin) (Kontrol Kecepatan Kipas Pintar) * Sasis/Kipas Pompa Air mendukung kipas berpendingin air dengan daya kipas maksimum 2A (24W). * CHA_FAN1/WP dapat terdeteksi otomatis jika kipas 3-pin atau 4-pin sedang digunakan. • 1 x Konektor Daya ATX 24 pin • 1 x Konektor Daya 8 pin 12V • 1 x Konektor Audio Panel Depan • 1 x Header USB 2.0 (Mendukung 2 port USB 2.0) (Mendukung Perlindungan dari ESD) • 1 x Header USB 3.1 Gen1 (Mendukung 2 port USB 3.1 Gen1) (Mendukung Perlindungan dari ESD)
OS	Microsoft® Windows® 10 64-bit

** Untuk informasi rinci tentang produk, kunjungi situs web kami: http://www.asrock.com*

Perlu diketahui, overclocking memiliki risiko tertentu, termasuk menyesuaikan pengaturan pada BIOS, menerapkan Teknologi Untied Overclocking, atau menggunakan alat bantu overclocking pihak ketiga. Overclocking dapat mempengaruhi stabilitas sistem, atau bahkan mengakibatkan kerusakan komponen dan perangkat sistem. Risiko dan biaya apa pun menjadi tanggungan Anda. Kami tidak bertanggung jawab atas kemungkinan kerusakan karena overclocking.

Contact Information

If you need to contact ASRock or want to know more about ASRock, you're welcome to visit ASRock's website at http://www.asrock.com; or you may contact your dealer for further information. For technical questions, please submit a support request form at https://event.asrock.com/tsd.asp

ASRock Incorporation

2F., No.37, Sec. 2, Jhongyang S. Rd., Beitou District,

Taipei City 112, Taiwan (R.O.C.)

ASRock EUROPE B.V.

Bijsterhuizen 11-11

6546 AR Nijmegen

The Netherlands

Phone: +31-24-345-44-33

Fax: +31-24-345-44-38

ASRock America, Inc.

13848 Magnolia Ave, Chino, CA91710

U.S.A.

Phone: +1-909-590-8308

Fax: +1-909-590-1026

DECLARATION OF CONFORMITY

Per FCC Part 2 Section 2.1077(a)

Responsible Party Name: ASRock Incorporation

Address: 13848 Magnolia Ave, Chino, CA91710

Phone/Fax No: +1-909-590-8308/+1-909-590-1026

hereby declares that the product

Product Name : Motherboard

Model Number : H310CM-ITX/ac

Conforms to the following specifications:

☒ FCC Part 15, Subpart B, Unintentional Radiators

Supplementary Information:

This device complies with part 15 of the FCC Rules. Operation is subject to the following two conditions: (1) This device may not cause harmful interference, and (2) this device must accept any interference received, including interference that may cause undesired operation.

Representative Person's Name: **James**

Signature :

Date : **May 12, 2017**

EU Declaration of Conformity

For the following equipment:

Motherboard

(Product Name)

H310CM-ITX/ac / ASRock

(Model Designation / Trade Name)

ASRock Incorporation

(Manufacturer Name)

2F., No.37, Sec. 2, Jhongyang S. Rd., Beitou District, Taipei City 112, Taiwan (R.O.C.)

(Manufacturer Address)

☒ **EMC —Directive 2014/30/EU (from April 20th, 2016)**

- ☐ EN 55022:2010/AC:2011 Class B
- ☒ EN 55024:2010/A1:2015
- ☒ EN 55032:2012+AC:2013 Class B
- ☒ EN 61000-3-3:2013
- ☒ EN 61000-3-2:2014

☒ **RED—Directive 2014/53/EU**

- ☐ EN 300 328 V2.1.1
- ☒ EN 301 489-17 V3.1.1
- ☐ EN 301 893 V2.1.1
- ☐ EN 301 489-3 V2.1.1
- ☐ EN 300 220 V3.1.1

☐ **LVD —Directive 2014/35/EU (from April 20th, 2016)**

- ☐ EN 60950-1 : 2011+ A2: 2013
- ☐ EN 60950-1 : 2006/A12: 2011

☒ RoHS — Directive 2011/65/EU

☒ CE marking

CE

(EU conformity marking)

ASRock EUROPE B.V.

(Company Name)

Bijsterhuizen 1111 6546 AR Nijmegen The Netherlands

(Company Address)

Person responsible for making this declaration:

(Name, Surname)

A.V.P

(Position / Title)

October 12, 2018

(Date)

P/N: 15G062127000AK V1.0