ASRock



PG34QSR

User Manual

Contents

Chapter 1 Introduction **1**

1.1 Package Contents 1

Chapter 2 Setting up the Monitor **2**

2.1 Attaching the Stand Arm and Base 2

2.2 Detaching the Stand Arm and Base 5

2.3 Making Connections 6

2.4 Adjusting the Viewing Angle 10

2.5 Using the Security Slot 13

Chapter 3 Monitor Overview **14**

3.1 Front View 14

3.2 Rear View 15

3.3 Bottom View 16

Chapter 4 Specifications **17**

4.1 Monitor Specifications 17

4.2 Supported Timing List 19

Chapter 5 Operating the Monitor **21**

5.1 Powering On/Off the Monitor 21

5.2 Control Buttons 23

5.3 Using the Joystick Control 24

Chapter 6 OSD Setup **26**

6.1 Accessing the OSD Menu 26

6.2 OSD Menus 27

Chapter 7 Troubleshooting **38**

Chapter 8 Safety Instructions **39**

Chapter 1 Introduction

Thank you for purchasing the ASRock PG34QSR monitor. This monitor is manufactured under ASRock's stringent quality control standards to deliver reliable performance and durability.

1.1 Package Contents

Your monitor ships with the components shown below. Please make sure that you have received all the components and contact your place of purchase or local distributor if any of the items is damaged or missing.

- ASRock PG34QSR Monitor
- ASRock PG34QSR Stand Arm
- ASRock PG34QSR Stand Base
- ASRock PG34QSR Quick Start Guide
- HDMI Cable
- DisplayPort Cable
- Power Cord



Monitor

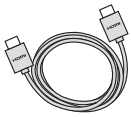

HDMI Cable



DisplayPort Cable

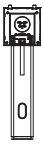

Stand Arm



Stand Base

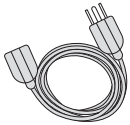

Power Cord



Quick Start Guide

Important

- Package contents may vary by country.
- The included power cord is exclusively for this monitor and should not be used with other products.
- The illustrations, images, and screen captures in this manual are for reference only. The actual product shall prevail.

English

Chapter 2 Setting up the Monitor

2.1 Attaching the Stand Arm and Base

Step 1. Installing the Stand Base

- Leave the monitor in its protective packaging.

> ⚠ Important
>
> Place the monitor in its protecti packaging, or on a soft, protected surface to avoid scratching the display screen.

- Insert the stand base into the stand arm and tighten the screw at the bottom of the stand base.

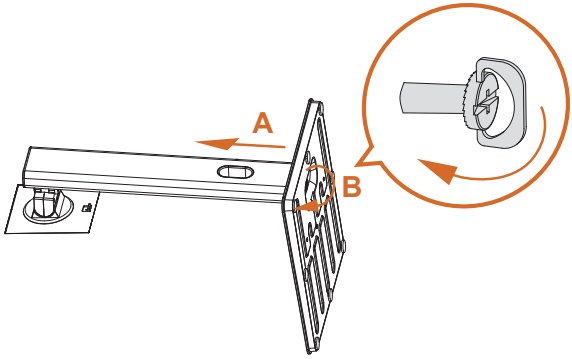

English

Step 2. Installing the Stand Arm

- Align the two tabs on the stand arm with the grooves on the back of the monitor, then slide the stand arm into place until it clicks.
- Push the stand lock to the locked position to ensure stability.

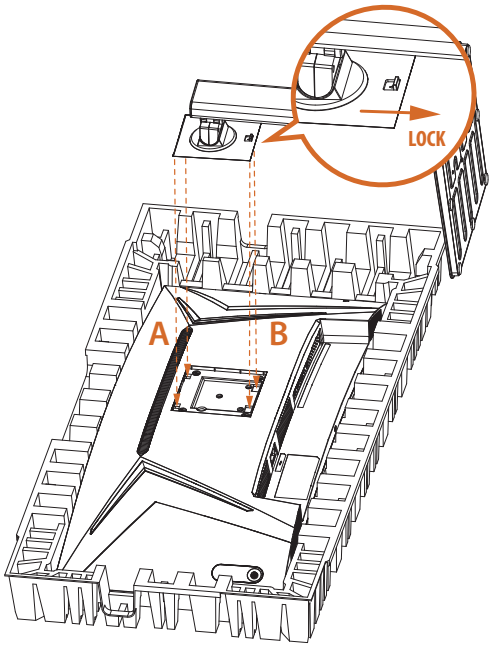

English

Step 3. Placing the Monitor Upright

Lift the monitor carefully out of the packaging and into its upright position on a flat, stable surface.

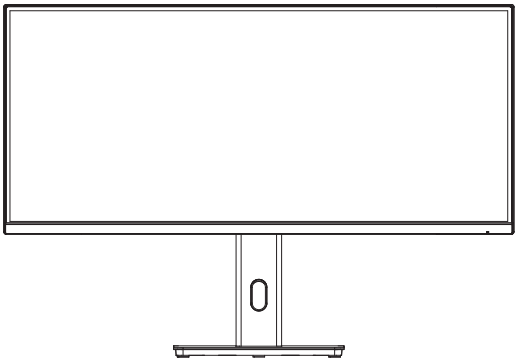



Important

Be careful not to touch or press the display screen areawhen lifting or moving the monitor to avoid any scratches or damage.

2.2 Detaching the Stand Arm and Base

Before removing the stand, be sure to turn off the monitor and disconnect all cables.

1. Push the stand lock to the unlocked position. Lift upward to disengage the tabs on the stand arm from the monitor. Remove the stand (arm and base).

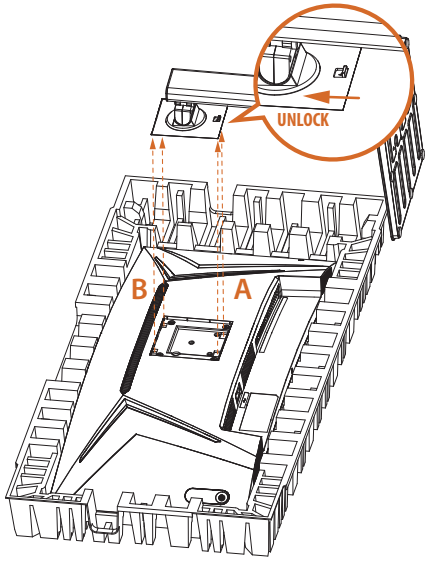

2. Remove the screw at the bottom of the stand base. Pull the stand base away from the stand arm to remove it.

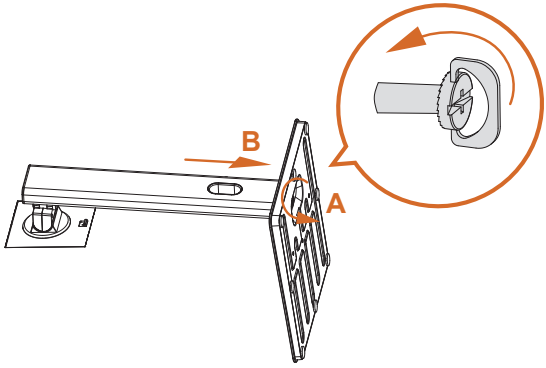

2.3 Making Connections

Connecting the Power Cord

Connect the power cord to the monitor, and then plug the other end into a wall outlet.
Pass the cable through the cable management hole on the stand arm.

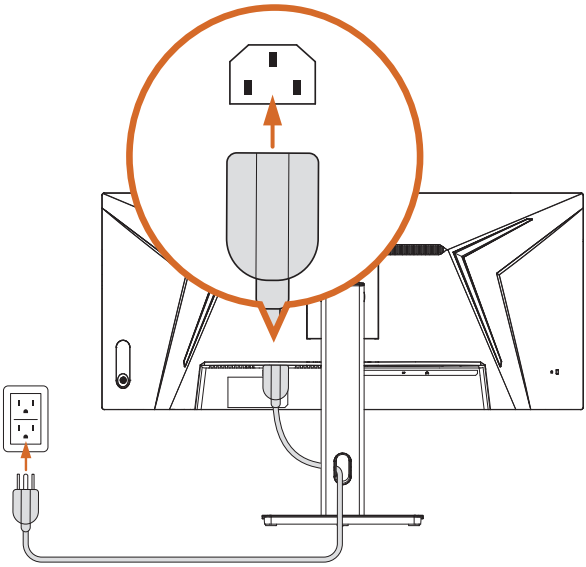

Important

Please make sure to make a grounding connection before connecting the power plug to the power source.

Additionally, when disconnecting the grounding connection, be sure to disconnect the power plug from the power source before proceeding.

English

Connecting the Monitor to the PC / Laptop

HDMI Connection

Connect one end of the HDMI cable to the HDMI connector on the back of the monitor. Then connect the other end to the HDMI connector on the PC or laptop. Pass the cable through the cable management hole on the stand arm.

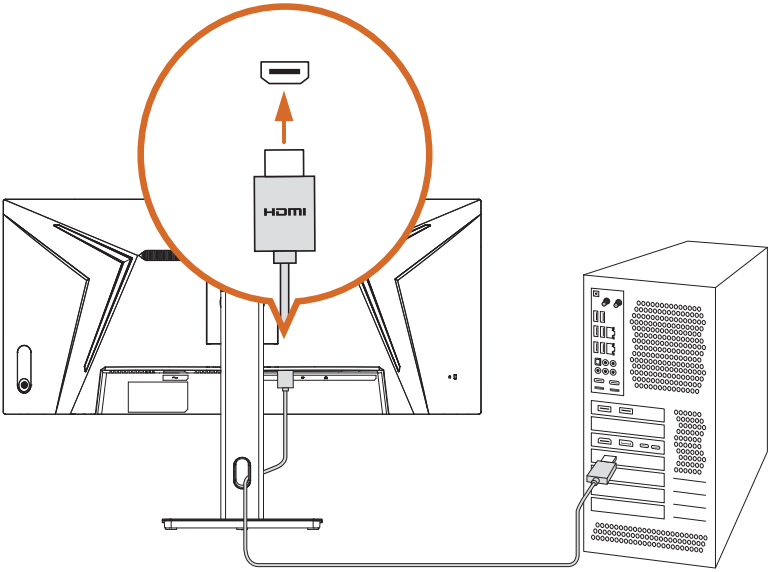

DisplayPort Connection

Connect one end of the DisplayPort cable to the DisplayPort input connector on the back of the monitor. Then connect the other end to the DisplayPort output connector on the PC or laptop. Pass the cable through the cable management hole on the stand arm.

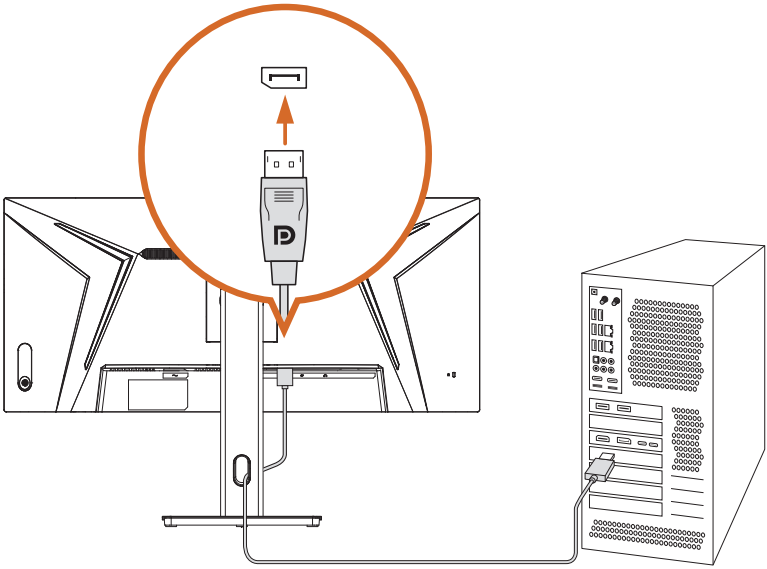

Audio Cable Connection

You can connect headphones to the headphone jack on the bottom of the monitor. Pass the cable through the cable management hole on the stand arm.

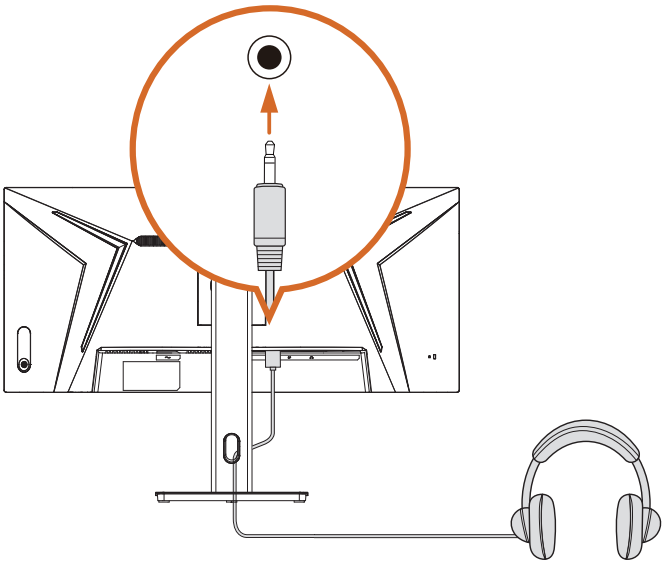

2.4 Adjusting the Viewing Angle

Tilt Angle Adjustment

For optimal viewing, position yourself directly in front of the monitor and adjust the viewing angle to your preference.

Hold the stand firmly with one hand while tilting the monitor forward or backward with the other hand to prevent the monitor from tipping over.

You can adjust the tilt angle from -5° to 20°.

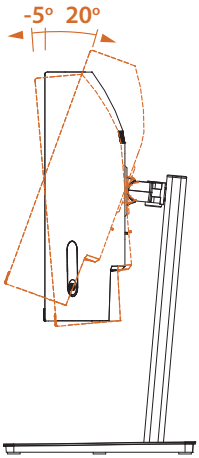



Important

Be careful not to touch or press the display screen area when adjusting the monitor.

Swivel Angle Adjustment

Swivel the monitor to the left or right to achieve the desired viewing angle.

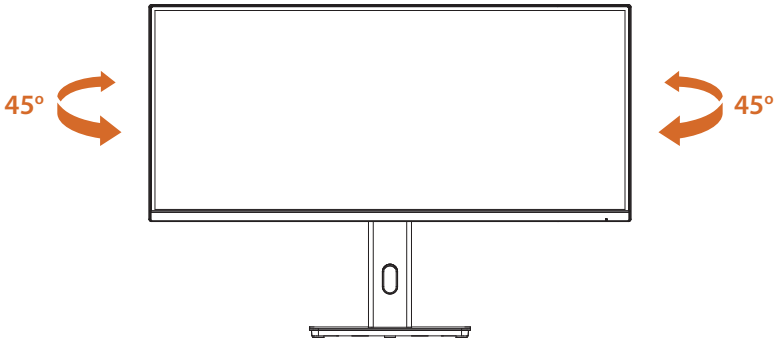



Important

Be careful not to touch or press the display screen area when adjusting the monitor.

Height Adjustment

You can lower or raise the monitor to the desired height.

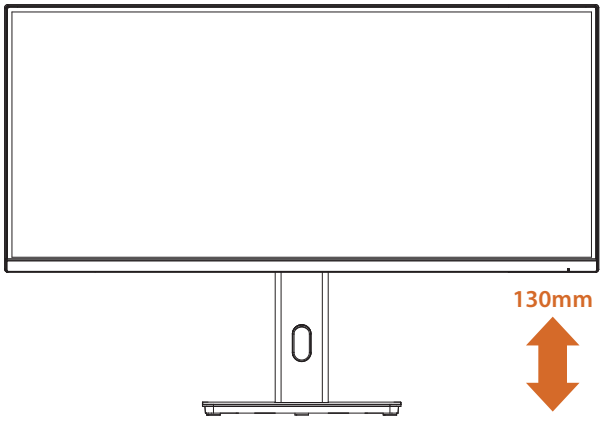



Important

Be careful not to touch or press the display screen area when adjusting the monitor.

2.5 Using the Security Slot

This monitor supports a Kensington-type security slot. A Kensington-compatible lock can be used to secure the monitor and help prevent theft.

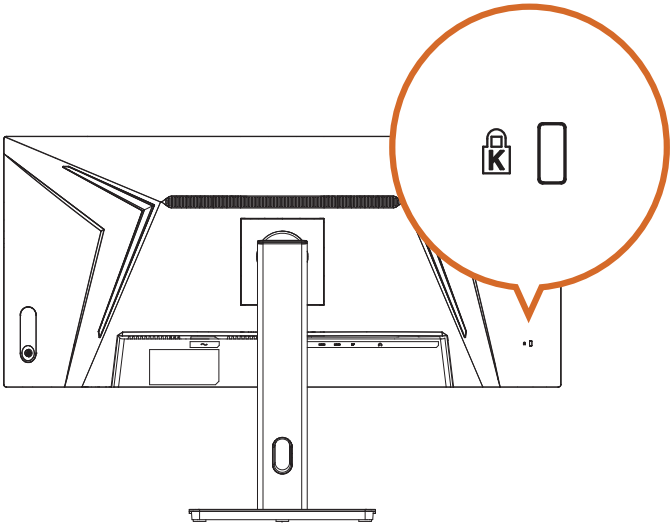

NOTE: A Kensington lock is not included. A compatible security lock must be purchased separately.

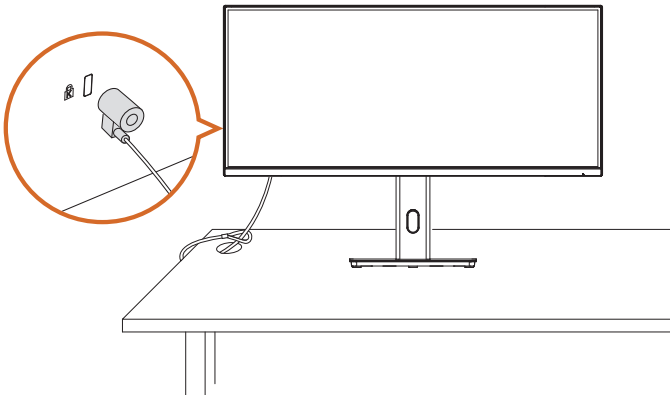

Chapter 3 Monitor Overview

3.1 Front View

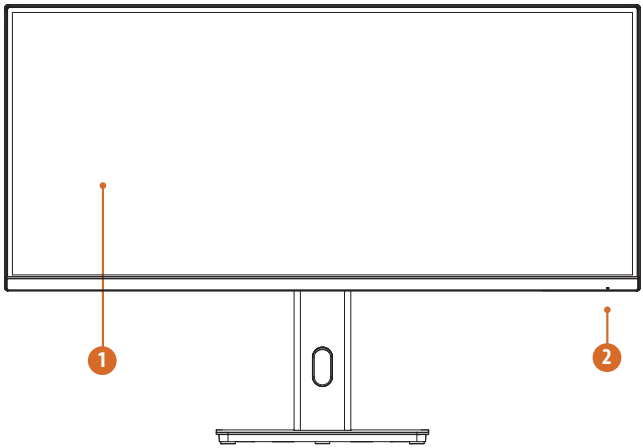

No.	Item	Description
1	Display Screen	Displays visual content.
2	Power Indicator	The color definition of the power indicator: • Solid Blue - Power-on mode • Solid Amber - Standby mode • LED Off - Off mode

3.2 Rear View

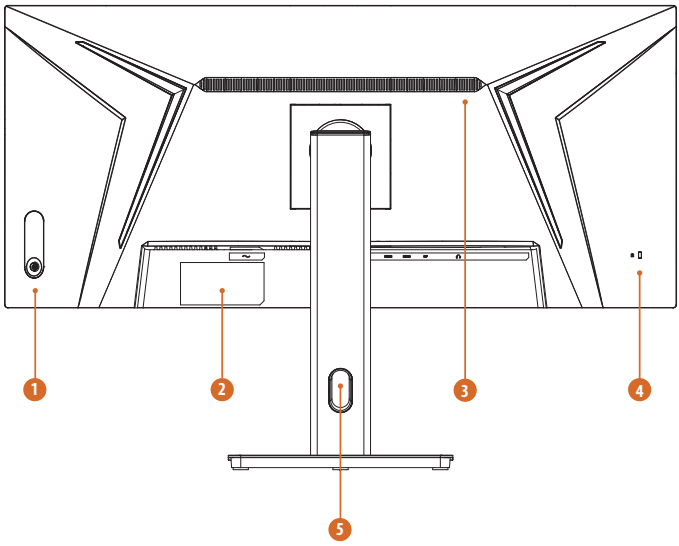

No.	Item	Description
1	Power On/Off Button	Press to turn the monitor on. Press and hold for 5 seconds to turn the monitor off.
	Control Buttons / Joystick	Please refer to "Control Buttons" and "Using the Joystick Control" sections for more details.
2	Serial Label	Lists the monitor model name and the power rating information.
3	Air Vent	Allows airflow for heat dissipation and ventilation.
4	Kensington Lock Slot	Secure the monitor with a compatible security lock (security lock not included).
5	Cable Management Hole	Organize cables by passing them through the hole.

3.3 Bottom View

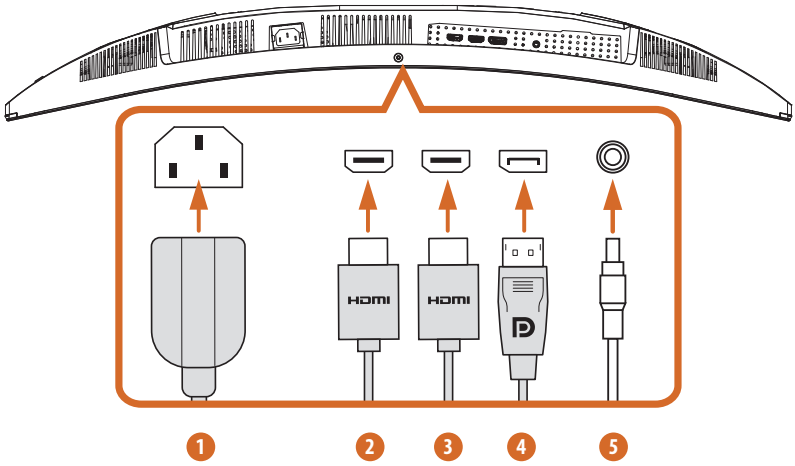

No.	Item	Description
1	AC-IN Port	Connect the power cord.
2	HDMI Port	Connect your computer using an HDMI cable.
3	HDMI Port	Connect your computer using an HDMI cable.
4	DisplayPort	Connect your computer using a DisplayPort cable.
5	Audio Output	Connect your headphones to the audio output jack. (sold separately)

Chapter 4 Specifications

4.1 Monitor Specifications

Model	PG34QSR	
Display	Panel Size	34"
	Viewing Area	797.22 (H) x 333.72 (V)
	Aspect Ratio	21:9
	Panel Type	VA
	Viewing Angle	178°(H) / 178°(V)
	Resolution	WQHD (3440 x 1440)
	Pixel Pitch	0.23175 mm
	Curvature	1500R
	Refresh Rate	200Hz@WQHD / 400Hz@WHD
	Response Time	1ms (GTG)
		1ms (MPRT)
	Brightness	450 nits (typ.)
	Color Space	95% DCI-P3 / 129% sRGB
	Display Colors	1.07B(8+FRC)
	Contrast Ratio	4000:1 (typ.)
	Display Surface	Anti-Glare
	HDR	HDR400
	Flicker-free	YES
	Low Blue Light	YES (S/W)
	Adaptive Sync	AMD FreeSync™ Premium
I/O Ports	HDMI	2 x HDMI™ 2.1 TMDS
	DisplayPort	1 x DisplayPort™ 1.4
	Audio Out	1 x Headphone Out
	Speaker	2 W x 2
Digital Signal Frequency	HDMI	31~183KHz (H) 48~120Hz (V)
	DP	300~300KHz (H) 48~200Hz (V)

English

Power Consumption	Power Consumption (Max)	≦ 72W
	Power Consumption(TYP.)	≦ 31W
	Power Saving Mode	≦ 0.5W
	Power Off Mode	≦ 0.3W
	Voltage	100~240Vac, 50/60Hz, 1.5A
Mechanical Design	Tilt Adjustment	-5°~+20°
	Swivel Adjustment	-45° ~ +45°
	Height Adjustment	0~130 mm
	Pivot Adjustment	±5°
	VESA Mount	100 x 100 mm (4 screw holes) M4 x 10 mm
Dimensions (W x H x D)	Dimensions with Stand	808 x 558.2 x 280 mm
	Dimensions without stand	808 x 363.9 x 116.9 mm
Weight	Net Weight with Stand	8.2 kg
	Net Weight without Stand	5.8 kg
	Gross Weight	12.7 kg
Environment	Operating	• Temperature: 0℃ to 40℃ • Humidity: 20% to 80%, non-condensing • Altitude: 0~3048 m
	Storage	• Temperature: -20℃ to 60℃ • Humidity: 20% to 80%, non-condensing • Altitude: 0~12192 m

4.2 Supported Timing List

Standard	Resolution	PG34QSR	
		HDMI	DP
VGA	640x480 @60Hz	V	V
	640x480 @72Hz	V	V
	640x480 @75Hz	V	V
MAC	640x480 @66.66Hz	V	V
VESA	720x400 @70Hz	V	V
SVGA	800x600 @56Hz	V	V
	800x600 @60Hz	V	V
	800x600 @72Hz	V	V
	800x600 @75Hz	V	V
MAC	832x624 @74.55Hz	V	V
XGA	1024x768 @60Hz	V	V
	1024x768 @70Hz	V	V
	1024x768 @75Hz	V	V
MAC	1152x870 @75Hz	V	V
VESA	1152x864 @75Hz	V	V
	1280x720 @60Hz	V	V
	1280x960 @60Hz	V	V
SXGA	1280x1024 @60Hz	V	V
	1280x1024 @75Hz	V	V
WXGA	1280x800 @60Hz	V	V
WSXGA+	1440x900 @60Hz	V	V
	1680x1050 @60Hz	V	V
FHD	1920x1080 @60Hz	V	V
	1920x1080 @120Hz	V	V
QHD	2560x1440 @60Hz	V	V
	2560x1440 @120Hz	V	V

WQHD	3440x1440 @60Hz	V	V
	3440x1440 @100Hz	V	V
	3440x1440 @120Hz		V
	3440x1440 @144Hz		V
	3440x1440 @165Hz		V
	3440x1440 @180Hz		V
	3440x1440 @200Hz		V
Video Timing Resolution	640x480p 59.94/60Hz 4:3	V	V
	720x480p 59.94/60Hz 16:9	V	V
	1280x720p 59.94/60Hz 16:9	V	V
	1920x1080p 59.94/60Hz 16:9	V	V
	720x576p 50Hz 16:9	V	V
	1280x720p 50Hz 16:9	V	V
	1920x1080p 50Hz 16:9	V	V
	1920x1080p 120Hz 16:9	V	V
	3840x2160p 60Hz 16:9	V	

Chapter 5 Operating the Monitor

5.1 Powering On/Off the Monitor

Press the Power button to turn on the monitor. The power indicator on the front of the monitor lights up solid blue to show that the monitor is on.

To turn the monitor off, press and hold the Power button for about 5 seconds until the power LED turns off.

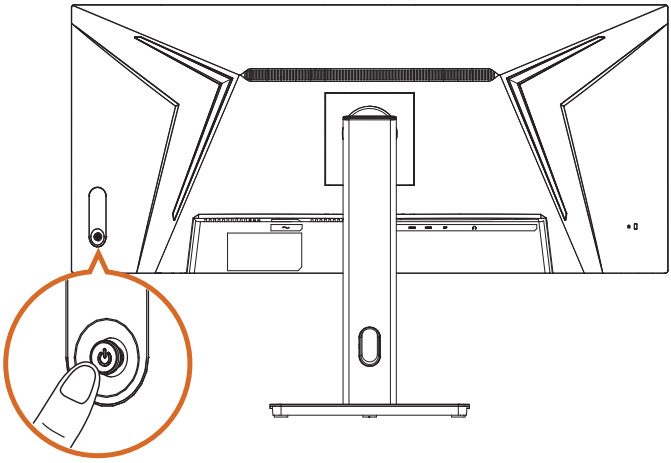

The power LED indicator is located as shown below.

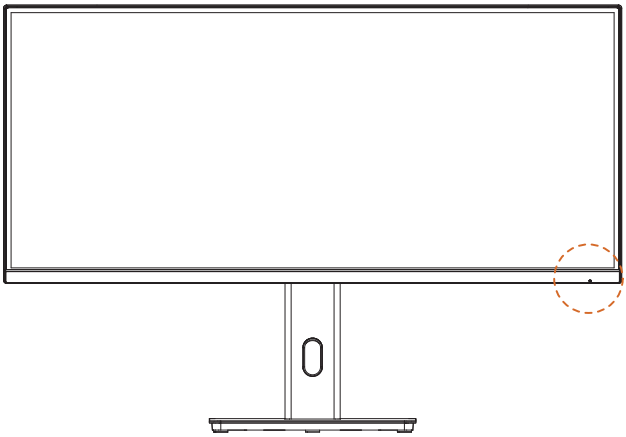

The color definition of the power indicator:

LED Indicator	Status	Description
Solid Blue	On	Solid blue light indicates the monitor is turned on.
Solid Amber	Standby	Solid amber light indicates the monitor is in standby mode.
LED Off	Off	No light indicates the monitor is turned off.

5.2 Control Buttons

Use the control buttons on the monitor to adjust the monitor settings.

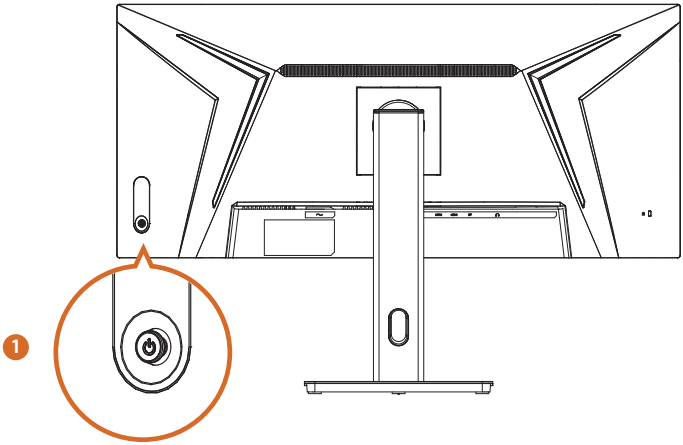

No.	Button	Function
1		**POWER** Press the button/joystick to turn on the monitor, and press and hold it for 5 seconds to turn it off. **MENU** Press to open the OSD menu. **INPUT SOURCE (Hotkey)** Move the joystick up to open the input source selection menu. **IMAGE SETUP (Hotkey)** Move the joystick down to open the Image Setup menu. **BRIGHTNESS (Hotkey)** Move the joystick to the left to open the brightness menu. **DFR MODE (Hotkey)** Move the joystick to the right to open the DFR menu.

5.3 Using the Joystick Control

When the OSD menu is open, use the joystick on the back of the monitor to navigate the OSD menu and adjust the settings.

1. To access the OSD menu, press the joystick button to launch the OSD main menu.
2. Move the joystick up, down, left, or right to navigate through the menu options.
3. Press the joystick button again to confirm the selection.
4. Move the joystick to the left to exit the OSD menu.

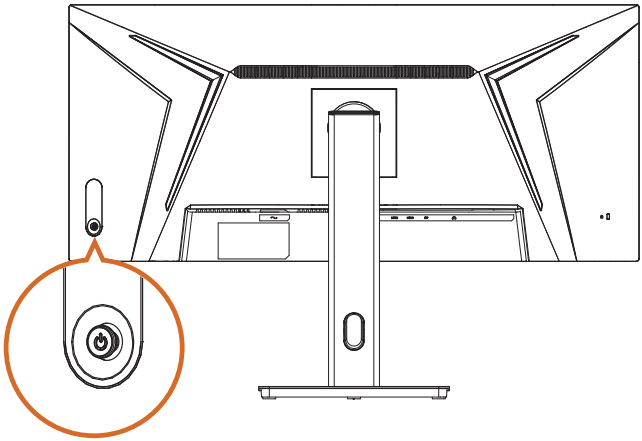

No.	Action		Joystick Control
1	Press		When the OSD menu is open, press to confirm the selection (Enter) or save the settings (OK).
2	Move Left		Move the joystick to the left to select menu items (Move), go back to the previous menu (Back) or exit the OSD menu (Exit). Decreases the value of the selected setting (Adjust).

3	Move Right		Move the joystick to the right to select menu items or go to the next menu (Move). Increases the value of the selected setting (Adjust).
4	Move Up		Move the joystick up to select menu items (Move).
5	Move Down		Move the joystick down to select menu items (Move).

Chapter 6 OSD Setup

This chapter describes how to configure the monitor using the OSD menu.

Important

- All information is subject to change without prior notice.
- The illustrations, images, and screen captures in this manual are for reference only. The actual product shall prevail.

6.1 Accessing the OSD Menu

After you press the Menu button, the OSD menu appears in the lower-right corner of the screen.

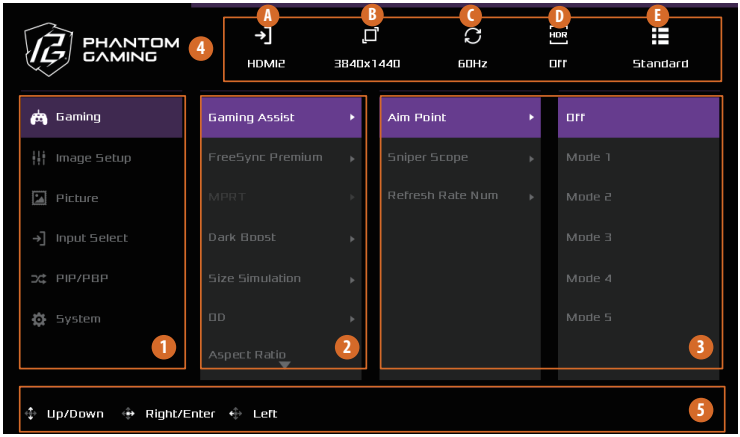

No.	Item	Description		
1	Main Menu	Displays the main menu.		
2	Submenu	Displays the submenu.		
3	Submenu Items and Options	Displays the submenu items and options.		
4	Current Status	Displays the current settings.	A	Current input source
			B	Current resolution
			C	Current refresh rate
			D	Current HDR status
			E	Current scene mode
5	Key Guide	Follow the key guide displayed at the bottom of the OSD screen to move or select (adjust) OSD settings.		

6.2 OSD Menus

Function: Gaming

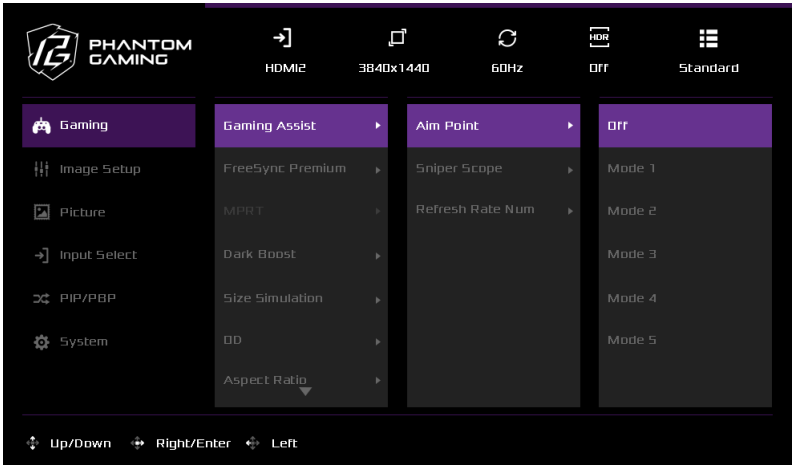

Main Menu	Submenu	Submenu Item	Submenu Option	Description
Gaming	Game Assist	Aim Point	Off	Turn off the Aim Point function, or select an Aim Point mode.
			Mode 1	
			Mode 2	
			Mode 3	
			Mode 4	
			Mode 5	
		Sniper Scope	Off	This feature enables a local, central zoom to improve targeting in FPS games.
			1.5X Zoom	
			2X Zoom	
			4X Zoom	
		Refresh Rate Num	Off	Displays the current refresh rate in the selected corner of the screen.
			Left Top	
			Right Top	
			Left Bottom	
			Right Bottom	
	FreeSync Premium	Off	Enables or disables FreeSync Premium.	
		On		

English

Gaming	MPRT	Off	Disables MPRT.
		On	Enables MPRT.
	Dark Boost	0-100	Enhances details in dark areas of the image.
	Size Simulation	Full	Simulates the viewing area of a smaller display size. *Based on the original signal source, black borders or bars may appear around the image.
		27"	
		24.5"	
	OD (Overdrive)	Off	Boosts response time with overdrive technology. • Normal: Balanced speed for smooth visuals. • Extreme: Provides the fastest response time for fast-moving scenes.
		Normal	
		Extreme	
	Aspect Ratio	4:3	Select the aspect ratio of the monitor.
		5:4	
		16:9	
		16:10	
		21:9	
	Reset Gaming	Restore all Gaming settings to factory defaults.	

Function: Image Setup

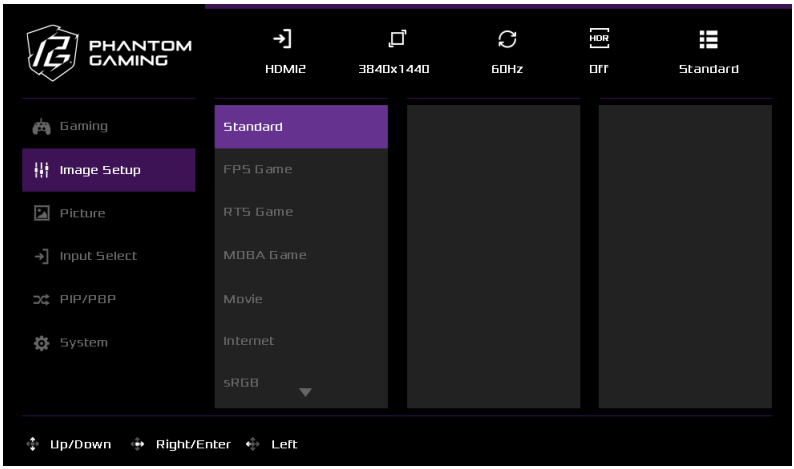

Main Menu	Submenu	Description
Image Setup	Standard	This scene mode is for document editing.
	FPS Game	Select this mode for First Person Shooter game playing.
	RTS Game	Select this mode for Real-Time Strategy (RTS) playing.
	MOBA Game	Select this mode for Multiplayer Online Battle Arena game playing.
	Movie	Select this mode for watching movies.
	Internet	Select this mode for browsing websites.
	sRGB	Select this mode for viewing photos and graphics from PCs.
	ECO	Select this mode to balance display brightness and power usage.
	User	Create a user-defined mode and customize monitor settings based on your preferences.
	HDR400	Select this mode for viewing HDR content.
	HDR Game	Select this mode for viewing HDR games.

Function: Picture

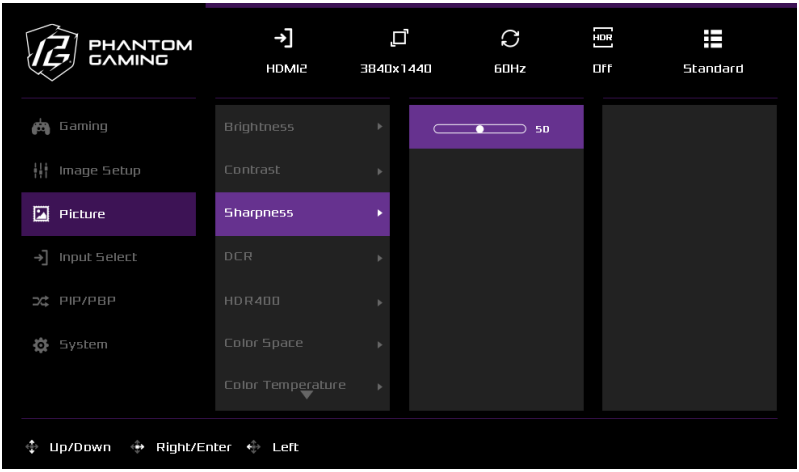

Main Menu	Submenu	Submenu Item	Description
Picture	Brightness	0-100	Adjusts the luminance of the backlight.
	Contrast	0-100	Adjusts the difference between the darkest and brightest areas of the image.
	Sharpness	0-100	Adjusts edge sharpness to enhance image clarity.
	DCR	Off	Dynamic Contrast Ratio automatically adjusts the monitor's backlight in real time. It dims the backlight in dark scenes and increases brightness in bright scenes.
		On	
	HDR400	Auto	Set to Auto to allow the monitor to automatically enable HDR when detecting compatible content.
		Off	
	Color Space	sRGB	This standard RGB color space is commonly used for the vast majority of web-based images.

Picture	Color Space	Adobe RGB	This mode is ideal for high-end photography and color-critical work.		
		DCI-P3	This mode is recommended for cinema-quality footage.		
		BT-2020	This mode is recommended for HDR content.		
		Native	Uses the panel's native color gamut.		
	Color Temperature	Cold	Increases the color temperature. Select Cold to enhance blue color of an image.		
		Cool	Increases the color temperature. The screen appears cooler with a blue tint.		
		Native	Loads the monitor's default color settings.		
		Warm	Decreases the color temperature. The screen appears warmer with a red/ yellow tint.		
		User	Red	0-100	Customize the color temperature by adjusting the red (R), green (G), and blue (B) levels according to your preference.
			Green	0-100	
			Blue	0-100	
	6-axis Color	Hue	Red	0-100	Adjust the tint of each color (red, green, blue, cyan, magenta, and yellow).
			Green	0-100	
			Blue	0-100	
			Cyan	0-100	
			Magenta	0-100	
			Yellow	0-100	
		Saturation	Red	0-100	Adjusts the saturation of each color (red, green, blue, cyan, magenta, and yellow).
			Green	0-100	
			Blue	0-100	
			Cyan	0-100	
			Magenta	0-100	
			Yellow	0-100	

6-Axis Color	Gamma	1.8	Adjust the gamma level. Lower numbers make the image lighter, while higher numbers increase contrast/ darkness.
		2.0	
		2.2	
		2.4	
		2.6	
	Low Blue Light	0-10	Adjust the Low Blue Light value of the display according to your preference.
Picture	RGB Range	Auto	The monitor can automatically detect the color range of the input signal. If colors are not displayed correctly, you can manually select the appropriate RGB range.
		Full	
		Limited	
	Reset Picture	Restore all Picture settings to factory defaults.	

Function: Input Select

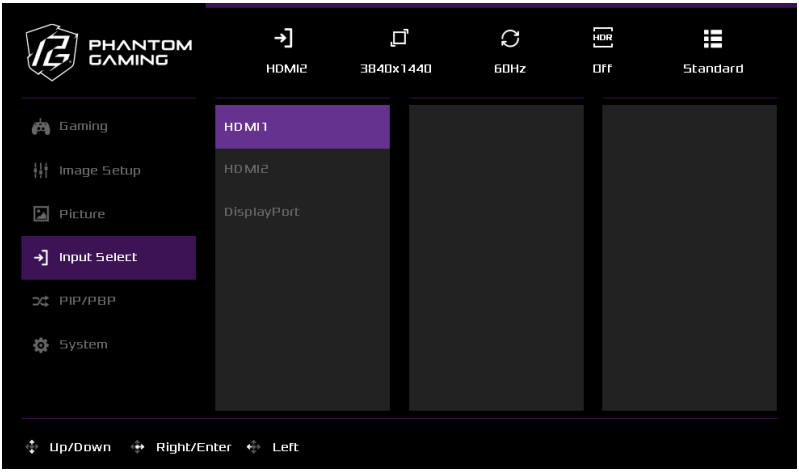

Main Menu	Submenu	Description
Input Select	HDMI1	Select the HDMI1 input.
	HDMI2	Select the HDMI2 input.
	DisplayPort	Select the DisplayPort input.

Function: PIP/PBP

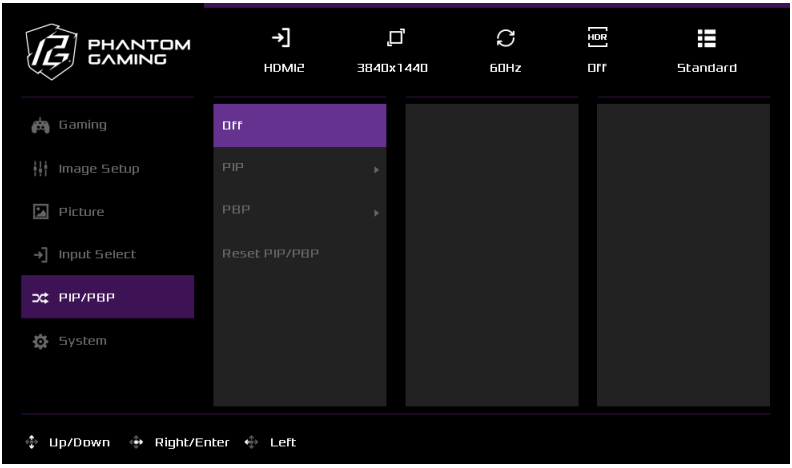

Main Menu	Submenu	Submenu Item	Submenu Option	Description
PIP/PBP	Off			Disables the PIP feature.
	PIP	Source	HDMI1	Select the secondary video source to display in the PIP window.
			HDMI2	
			DisplayPort	
		PIP Size	Small	Select the size of the PIP window.
			Medium	
			Large	
		Location	Left Top	Select the position of the PIP window on the screen.
			Right Top	
			Left Bottom	
			Right Bottom	
		Display Switch		Use this item to switch the primary and secondary sources. The secondary source is displayed in the PIP window by default.

PIP/PBP	PIP	Audio Switch	HDMI1	Select the audio source for PIP mode.
			HDMI2	
			DisplayPort	
	PBP	Source	HDMI1	Select the secondary video source for PBP mode.
			HDMI2	
			DisplayPort	
		PBP Size	Full	Select whether the PBP windows maintain their aspect ratio or fill the available screen area.
			Aspect	
		Display Switch		Use this item to switch the primary and secondary sources. The secondary source is displayed in the PBP window by default.
		Audio Switch	HDMI1	Select the audio source for PBP mode.
			HDMI2	
			DisplayPort	
	Reset PIP/PBP			Restore all PIP/PBP settings to factory defaults.

Function: System

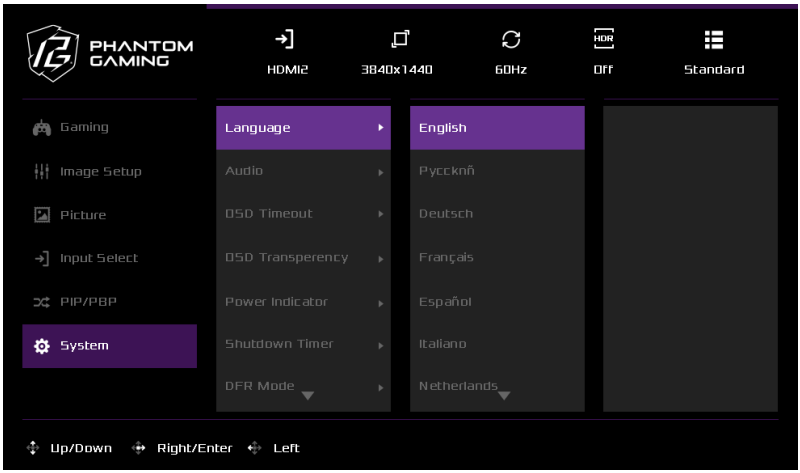

Main Menu	Submenu	Submenu Item		Description
System	Language	–		Select the OSD language.*
	Audio	Volume	0 - 100	Adjust the volume level.
		Mute	On	Enables or disables the mute function.
			Off	
	OSD Timeout	5		Select how long the OSD menu remains visible before it automatically closes.
		15		
		30		
		60		
	OSD Transparency	On		Enables or disables OSD transparency.
		Off		
	Power Indicator	On		Enables or disables the power indicator LED.
		Off		
	Shutdown Timer	30 Minutes		Sets the monitor to automatically turn off after 30, 45, 60, or 120 minutes.
		45 Minutes		
		60 Minutes		
		120 Minutes		
		Off		

System	DFR (Dynamic Frequency and Resolution) Mode	Off	DFR Mode allows you to switch between two resolution and refresh rate configurations.
		On	
	DisplayPort Version	1.4	Select the DisplayPort version.
		1.2	
	DDC/CI	On	Enables or disables DDC/CI support.
		Off	
	Information	Resolution:	Displays information about the primary input source.
		H. Frequency:	
		V. Frequency:	
		Pixel Clock:	
		Model Number:	
	Factory Reset	–	Restore all OSD settings to factory defaults.

*English, Русский, Deutsch, Français, Español, Italiano, Nederlands, Suomi, Polski, Português, Português (Brasil), 繁體中文 , 日本語 , Čeština, Hrvatski, Magyar, Română, ไทย, Bahasa Indonesia, Български, Українська

Chapter 7 Troubleshooting

Problem and Question	Possible Solution
The power LED does not light up.	• Check if the Power button is pressed and make sure the monitor is turned on. • Make sure the power cord is properly connected.
No signal	• Check that the video cable is properly connected. • Check the video cable and connectors for damage.
Picture is fuzzy.	• Adjust the contrast and brightness settings.
The image flickers or shows interference.	• Move nearby electrical devices that may cause interference away from the monitor.
The power LED is on, but there is no image.	• Make sure the computer is turned on. • Make sure the graphics card is properly installed. • Make sure the video cable is securely connected to both the monitor and the computer. • Check the video cable and connectors for damage.
One of the primary colors (red, green, or blue) is missing.	• Check the video cable connection and make sure the cable and connectors are not damaged.
Picture has color defects (white does not look white)	• Adjust the RGB color settings or select a different color temperature.
Poor brightness or contrast.	• If screen brightness decreases significantly over time and display performance is affected, contact an authorized ASRock service center for assistance.
Unable to open OSD menu.	• Turn off the monitor, unplug the power cord, wait a few seconds, reconnect it, and then turn the monitor on again.

Chapter 8 Safety Instructions

- Read the safety instructions carefully and thoroughly.
- All cautions and warnings on the device or User Guide should be noted.
- Refer servicing to qualified personnel only.

Safety Information

- Make sure that the power voltage is within its safety range and has been adjusted properly to the value of 100~240V before connecting the device to the power outlet.
- To avoid electric shock, always use the power cord and plug with a properly grounded power outlet.
- If the power cord comes with a 3-pin plug, do not disable the protective earth pin from the plug.
- Always disconnect the power cord or switch the wall socket off if the device would be left unused for a certain time to achieve zero energy consumption.
- Place the power cord in a way that people are unlikely to step on it. Do not place anything on the power cord.
- If this device comes with an adapter, use only the ASRock provided AC adapter approved for use with this device.
- To prevent fire or shock hazard, never expose the monitor to rain or moisture.
- Never try to open the monitor cabinet. The dangerous high voltages inside the monitor may result in serious physical injury.
- Never place this product near or over a radiator or heat source unless proper ventilation is provided.
- Do not overload power strips and extension cords. Overloading can result in fire or electric shock.
- Never push objects or spill liquid of any kind into the slots on the monitor cabinet.

European Union:



Batteries, battery packs, and accumulators should not be disposed of as unsorted household waste. Please use the public collection system to return, recycle, or treat them in compliance with the local regulations.

California, USA:



The button cell battery may contain perchlorate material and requires special handling when recycled or disposed of in California. For further information please visit: https://dtsc.ca.gov/perchlorate/

Canadian Department of Communications Statement

This digital apparatus does not exceed the Class B limits for radio noise emissions from digital apparatus set out in the Radio Interference Regulations of the Canadian Department of Communications.

This class B digital apparatus complies with Canadian ICES-003.

This Class B digital apparatus meets all requirements of the Canadian Interference - Causing Equipment Regulations.

Cet appareil numérique de la classe B respecte toutes les exigences du Réglement sur le matériel brouiller du Canada.

Environment

- To reduce the possibility of heat-related injuries or of overheating the device, do not place the device on a soft, unsteady surface or obstruct its air ventilators.
- Use this device only on a hard, flat and steady surface.
- To prevent the device from tipping over, secure the device to a desk, wall or fixed object with an anti-tip fastener that helps to properly support the device and keep it safe in place.
- To prevent fire or shock hazard, keep this device away from humidity and high temperature.
- Do not leave the device in an unconditioned environment with a storage temperature above 60℃ or below -20℃ , which may damage the device.
- The maximum operating temperature is around 40℃ .
- When cleaning the device, be sure to remove the power plug. Use a piece of soft cloth rather than industrial chemical to clean the device. Never pour any liquid into the opening; that could damage the device or cause electric shock.
- Always keep strong magnetic or electrical objects away from the device.
- If any of the following situations arises, get the device checked by service personnel:
  - The power cord or plug is damaged.
  - Liquid has penetrated into the device.
  - The device has been exposed to moisture.
  - The device does not work well or you can not get it working according to the User Guide.
  - The device has dropped and damaged.
  - The device has obvious sign of breakage.

Warning!

Overuse of screens is likely to affect eyesight.

Recommendations:

Take a 10-minute break for every 30 minutes of screen time.

Children under 2 years of age should have no screen time. For children aged 2 years and over, screen time should be limited to less than one hour per day.

CE Conformity



This device complies with the requirements set out in the Council Directive on the Approximation of the Laws of the Member States relating to Electromagnetic Compatibility (2014/30/EU), Low-voltage Directive (2014/35/EU), ErP Directive (2009/125/EC) and RoHS directive (2011/65/EU). This product has been tested and found to comply with the harmonized standards for Information Technology Equipment published under Directives of Official Journal of the European Union.

ASRock Contact Information

ASRock EUROPE B.V.

Address : Bijsterhuizen 11-11, 6546 AR Nijmegen,The Netherlands

Phone: +31-24-345-44-33

Technical Support

Phone: +31-24-345-44-33

Online Support https://event.asrock.com/tsd.asp

FCC-B Radio Frequency Interference Statement



This equipment has been tested and found to comply with the limits for a Class B digital device, pursuant to Part 15 of the FCC Rules. These limits are designed to provide reasonable protection against harmful interference in a residential installation. This equipment generates, uses and can radiate radio frequency energy and, if not installed and used in accordance with the instruction manual, may cause harmful interference to radio communications. However, there is no guarantee that interference will not occur in a particular installation. If this equipment does cause harmful interference to radio or television reception, which can be determined by turning the equipment off and on, the user is encouraged to try to correct the interference by one or more of the measures listed below:

- Reorient or relocate the receiving antenna.
- Increase the separation between the equipment and receiver.
- Connect the equipment into an outlet on a circuit different from that to which the receiver is connected.
- Consult the dealer or an experienced radio/television technician for help.

Notice 1

The changes or modifications not expressly approved by the party responsible for compliance could void the user's authority to operate the equipment.

Notice 2

Shielded interface cables and AC power cord, if any, must be used in order to comply with the emission limits.

This device complies with Part 15 of the FCC Rules. Operation is subject to the following two conditions:

- This device may not cause harmful interference
- This device must accept any interference received, including interference that may cause undesired operation.

ASRock Contact Information

ASRock America, Inc.

Address : 13848 Magnolia Ave, Chino, CA91710, U.S.A.

Phone: +1-909-590-8308

Technical Support

Phone: +1-909-590-8308

Online Support https://event.asrock.com/tsd.asp

WEEE Statement



Under the European Union (“EU”) Directive on Waste Electrical and Electronic Equipment, Directive 2012/19/EU, products of “electrical and electronic equipment” cannot be discarded as municipal waste anymore and manufacturers of covered electronic equipment will be obligated to take back such products at the end of their useful life.

Chemical Substances Information

In compliance with chemical substances regulations, such as the EU REACH Regulation (Regulation EC No. 1907/2006 of the European Parliament and the Council), ASRock provides the relevant information at:
https://asrock.com/general/about.asp?cat=Responsibility

RoHS Statement

Japan JIS C 0950 Material Declaration

A Japanese regulatory requirement, defined by specification JIS C 0950, mandates that manufacturers provide material declarations for certain categories of electronic products offered for sale after July 1, 2006.

HDMI® HIGH-DEFINITION MULTIMEDIA INTERFACE

The terms HDMI, HDMI High-Definition Multimedia Interface, HDMI trade dress and the HDMI Logos are trademarks or registered trademarks of HDMI Licensing Administrator, Inc.

UK CA

English

Copyright and Trademarks Notice

Copyright © ASRock Inc. All rights reserved. The ASRock logo used is a registered trademark of ASRock Inc. All other marks and names mentioned may be trademarks of their respective owners. No warranty as to accuracy or completeness is expressed or implied. ASRock reserves the right to make changes to this document without prior notice.

Technical Support

If a problem arises with your product and no solution can be obtained from the user's manual, please contact your place of purchase or local distributor. Alternatively, please visit https://www.asrock.com for further guidance.

Product information for EU energy label

https://eprel.ec.europa.eu/screen/product/electronicdisplays/2765987

Copyright Notice

No part of this documentation may be reproduced, transcribed, transmitted, or translated in any language, in any form or by any means, except duplication of documentation by the purchaser for backup purpose, without written consent of ASRock Inc.

Products and corporate names appearing in this documentation may or may not be registered trademarks or copyrights of their respective companies, and are used only for identification or explanation and to the owners' benefit, without intent to infringe.

Disclaimer

Because the monitor specifications and the firmware might be updated, the content of this documentation will be subject to change without notice. In case any modifications of this documentation occur, the updated version will be available on ASRock's website without further notice. If you require technical support related to this monitor, please visit our website for specific information about the model you are using. You may find the latest monitor support list on ASRock's website as well.

ASRock Website: http://www.asrock.com

Version 1.0
Published August 2026
Copyright©2026 ASRock INC. All rights reserved.