OPEN

Industry Standard, Flexible Architecture

GREEN

Less Heat, Less Power Consumption

STABLE

Robust Design, Quality Parts

Stable and
Reliable Solution

Server/Workstation
Motherboard

1U24E1S-GENOA/2L2T

User Manual

English

Version 1.12
Published Oct. 2025
Copyright©2025 ASRock Rack Inc. All rights reserved.

Copyright Notice:

No part of this documentation may be reproduced, transcribed, transmitted, or translated in any language, in any form or by any means, except duplication of documentation by the purchaser for backup purpose, without written consent of ASRock Rack Inc.

Products and corporate names appearing in this documentation may or may not be registered trademarks or copyrights of their respective companies, and are used only for identification or explanation and to the owners' benefit, without intent to infringe.

Disclaimer:

Specifications and information contained in this documentation are furnished for informational use only and subject to change without notice, and should not be constructed as a commitment by ASRock Rack. ASRock Rack assumes no responsibility for any errors or omissions that may appear in this documentation.

With respect to the contents of this documentation, ASRock Rack does not provide warranty of any kind, either expressed or implied, including but not limited to the implied warranties or conditions of merchantability or fitness for a particular purpose.

In no event shall ASRock Rack, its directors, officers, employees, or agents be liable for any indirect, special, incidental, or consequential damages (including damages for loss of profits, loss of business, loss of data, interruption of business and the like), even if ASRock Rack has been advised of the possibility of such damages arising from any defect or error in the documentation or product.

This device complies with Part 15 of the FCC Rules. Operation is subject to the following two conditions:

(1) this device may not cause harmful interference, and
(2) this device must accept any interference received, including interference that may cause undesired operation.

CALIFORNIA, USA ONLY

The Lithium battery adopted on this server motherboard contains Perchlorate, a toxic substance controlled in Perchlorate Best Management Practices (BMP) regulations passed by the California Legislature. When you discard the Lithium battery in California, USA, please follow the related regulations in advance.

"Perchlorate Material-special handling may apply, see www.dtsc.ca.gov/hazardouswaste/perchlorate"

Setting up the Server in a Restricted Access Location/Restricted Access Area

- Access can only be gained by service persons or by users who have been instructed about the reasons for the restrictions applied to the location and about any precautions that shall be taken.
- Access is through the use of a tool or lock and key, or other means of security, and is controlled by the authority responsible for the location.
- Leave enough clearance (25 inches in the front and 30 inches in the back of the rack) to allow the front door to be opened completely and to allow for sufficient airflow.
- This product is for installation merely in a Restricted Access Location.
- This product is not suitable for use with visual display work place devices according to §2 of the the German Ordinance for Work with Visual Display Units.
- Only skilled person and Instructed person can remove the chassis covers to access the inside of the system.

ASRock Rack's Website: www.ASRockRack.com

Replaceable Batteries

CAUTION

RISK OF EXPLOSION IF BATTERY IS REPLACED BY AN INCORRECT TYPE.

DISPOSE OF USED BATTERIES ACCORDING TO THE INSTRUCTIONS

Warning

When removal of the chassis lid required for servicing:

- Turn off power and unplug any power cords/cables, and
- Reinstall the chassis lid before restoring power.

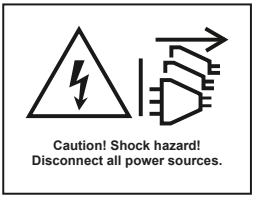

Important Safety Instructions

Pay close attention to the following safety instructions before performing any of the operation. Basic safety precautions should be followed to protect yourself from harm and the product from damage:

- Operation of the product should be carried out by suitably trained, qualified, and certified personnel only to avoid risk of injury from electrical shock or energy hazard.
- Disconnect the power cord from the wall outlet when installing or removing main system components, such as the server motherboard and power supply unit.
- Place the system on a stable and flat surface.
- Use extreme caution when working with high-voltage components.
- When handling parts, use a grounded wrist strap designed to prevent static discharge.
- Keep the area around the system clean and clutter-free.
- Keep all components and printed circuit boards (PCBs) in their antistatic bags when not in use.
- Handle a board by its edges only; do not touch its components, peripheral chips, memory modules or contacts.
- The power cord must be connected to a socket or outlet with a ground connection.

Contents

Chapter 1 Introduction 1

1.1 Shipping Box Contents 2

1.2 Specifications 3

Chapter 2 Server System Overview 6

2.1 System Components 6

2.2 Internal Features 7

2.3 System Front Panel 9

2.4 System Rear Panel 9

2.5 Front I/O Panel 10

2.6 PSU LED 12

2.7 Hard Drive Tray LED 13

Chapter 3 Hardware Installation and Maintenance 14

3.1 Server Top Cover 15

3.2 SSD (E1.S Drive) 19

3.3 Power Supply 22

3.4 System Fan 25

3.5 Add-in Card (GPU Card) 26

3.6 OCP Card 28

3.7 EVAC 29

3.8 Air Duct 30

Chapter 4 Server Motherboard (GENOAD24QM32-2L2T/BCM) 31

4.1 Layout 31

4.2 Block Diagram 34

4.3 Installing the CPU and Heatsink (LGA 6096 Socket) 35

4.4 Installing the Memory Modules (DIMM) 40

Appendix 41

Installing the Server in a Rack 41

Chapter 1 Introduction

Thank you for purchasing 1U24E1S-GENOA/2L2T, a reliable barebone system produced under ASRock Rack's consistently stringent quality control. It delivers excellent performance with robust design conforming to ASRock Rack's commitment to quality and endurance.

This guide provides the instructions of insertion and extraction of chassis components, such as chassis covers, system fans, power supplies, hard drive trays, and other main components this system supports. If the system is pre-installed a server motherboard, refer to the server motherboard user manual for the information of the server motherboard components, specifications and BIOS settings.

System	ASRock Rack Server Motherboard
1U24E1S-GENOA/2L2T	GENOAD24QM32-2L2T/BCM

Because the hardware specifications might be updated, the content of this documentation will be subject to change without notice.

The illustrations shown in this manual are for reference purposes only and may not exactly match the model purchased.

If requiring technical support related to this system, please visit the website for specific information about the using model.
http://www.asrockrack.com/support/

English

1.1 Shipping Box Contents

Items	Quantity
Server Barebone: 1U24E1S-GENOA/2L2T	1
CPU Heatsink	1
Rail Kit	1
Accessory Box - 2 Power Cords - 24 E1.S Trays (Only for Southco Trays) - 48 M2.5 Screws (Only for Southco Trays)	1

If any items are missing or appear damaged, contact the authorized dealer.

1.2 Specifications

1U24E1S-GENOA/2L2T	
System	
Form Factor	1U Rackmount
Dimension	776.5 x 438 x 43.5mm (30.6" x 17.2" x 1.7")
Support MB	GENOAD24QM32-2L2T/BCM
Front Panel	
Button	Power on/off, reset, ID
LED	Power LED, LAN 1/2 LED, system event LED, ID LED
I/O Port	1 Type-A (USB3.2 Gen1)
External Drive Bay / Storage	
Front Side Drive Bay	24 Hot-swap E1.S (PCIe5.0 x4) drive bays, support 9.5mm/15mm width
Front Side Backplane	3 8-port E1.S passive backplane (E1S8_BPB2_G5)
Power Supply	
Type	1+1 Hot-swap slim RPSU
Output Watt	1600W @ 100-240Vac input
Efficiency	80-PLUS Platinum
AC Input	100-240Vac, 50/60Hz
System Fan	
Fan	7 PWM hot-swap 40x56mm fans
Processor System	
CPU	Supports AMD EPYC™ 9005*/9004 (with AMD 3D V-Cache™ Technology) and 97x4 series processors *A BIOS update is required to support AMD EPYC™ 9005 series processors.
Socket	1 Socket SP5 (LGA 6096)
Thermal Design Power	Up to 400W
Chipset	System on Chip

System Memory	
Supported DIMM Quantity	24 DIMM slots (2DPC)
Supported Type	Supports DDR5 288-pin RDIMM, RDIMM-3DS
Max. Capacity per DIMM	RDIMM: 128GB (2Rx4) RDIMM-3DS: 256GB (2Rx4)
Max. DIMM Frequency	RDIMM: 4800MHz (1DPC) RDIMM 1R: 4000MHz (2DPC) RDIMM 2R: 3600MHz (2DPC) RDIMM-3DS: 4800MHz (1DPC); 3600MHz (2DPC)
Voltage	1.1V
PCIe Expansion Slot	
PCIe x16	1 FHHL PCIe5.0 x16
TPM	
TPM Support	1 (13-pin, SPI)
Ethernet	
OCP Slot	1 OCP NIC 3.0 (PCIe5.0 x16)
Server Management	
BMC Controller	ASPEED AST2600
IPMI Dedicated GLAN	1 Realtek RTL8211F for dedicated management GLAN
Rear I/O	
UID Button/ LED	1 UID button w/ LED
VGA Port	1 DB15 (VGA)
USB3.2 Gen1 Port	2 Type-A (USB3.2 Gen1)
RJ45	2 RJ45 (10GbE) 2 RJ45 (1GbE) 1 Dedicated IPMI
System BIOS	
BIOS Type	AMI UEFI BIOS; 256Mb (32MB) SPI Flash ROM
BIOS Feature	ASRock Rack Instant Flash, ACPI 6.4 and above compliance wake up events, SMBIOS 3.5.0 and above, Plug and Play (PnP)

Hardware Monitor	
Temperature	CPU, MB, card side, TR1 temperature sensing
Fan	CPU/Rear/Front fan tachometer CPU quiet fan (allows chassis fan speed auto-adjust by CPU temperature) CPU/Rear/Front fan multi-speed control
Voltage	VDDCR_CPU, VDDCR_SOC, VDDIO, VDD_18_S5, VDD_33_S5, VDD_11_S3, +3V, +5V, +12V, +BAT, +1V8SB, 3VSB, 5VSB
Environment	
Temperature	Operation temperature: 10°C ~ 35°C Non operation temperature: -40°C ~ 70°C
Humidity	Non operation humidity: 20% ~ 90% (non condensing)

The functions are supported depending on the type of the server motherboard. Refer to the server motherboard manual for more information.

Chapter 2 Server System Overview

This chapter provides diagrams showing the location of important components of the server system.

2.1 System Components

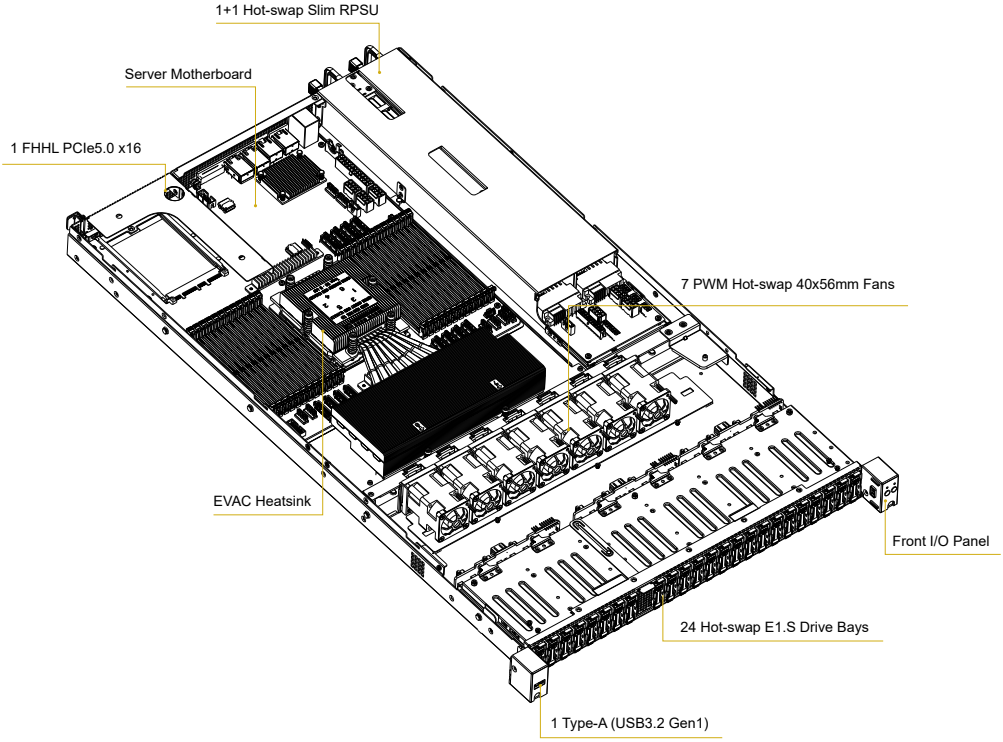

Note: The illustrations in this user manual are for references only. The actual product may be slightly different by SKU.

English

2.2 Internal Features

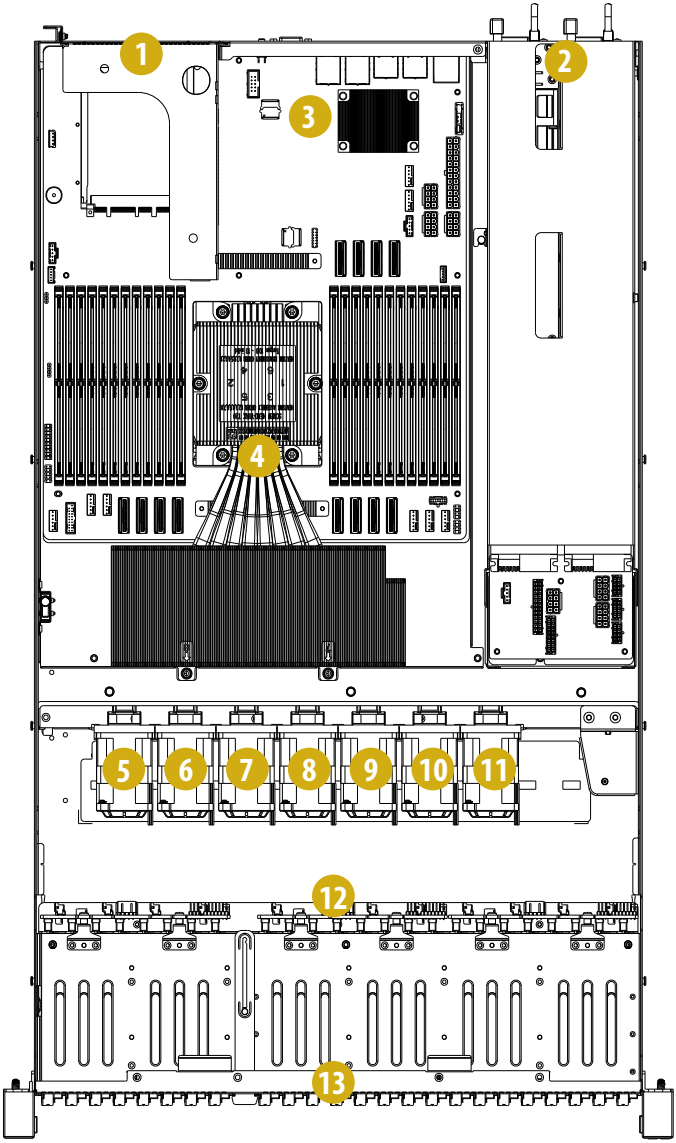

No.	Description
1	1 FHHL PCIe5.0 x16
2	1+1 Hot-swap slim RPSU
3	Server motherboard
4	EVAC heatsink
5	System fan (FAN1)
6	System fan (FAN2)
7	System fan (FAN3)
8	System fan (FAN4)
9	System fan (FAN5)
10	System fan (FAN6)
11	System fan (FAN7)
12	3 Backplane boards (BPB)
13	24 Hot-swap E1.S (PCIe5.0 x4) drive bays, support 9.5mm/15mm width

2.3 System Front Panel

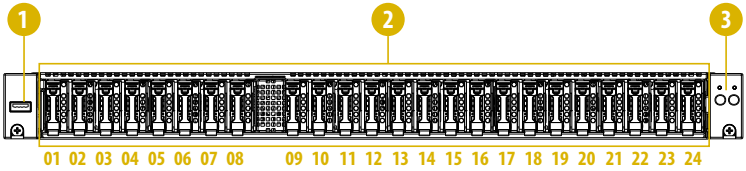

No.	Description
1	1 Type-A (USB3.2 Gen1)
2	24 Hot-swap E1.S (PCIe5.0 x4) drive bays (support 9.5mm/15mm width)
3	Front I/O panel

2.4 System Rear Panel

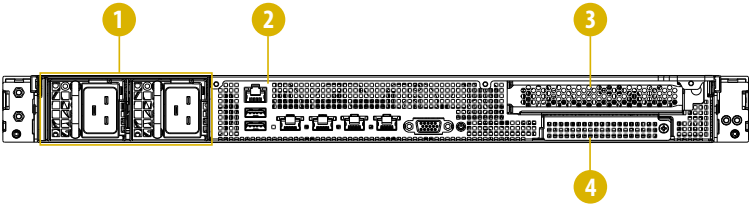

No.	Description
1	1+1 Hot-swap slim RPSU
2	Rear I/O panel (depends on the specificaiton of the server motherboard)
3	1 FHHL PCIe5.0 x16 slot
4	1 OCP NIC 3.0 (PCIe5.0 x16) slot

2.5 Front I/O Panel

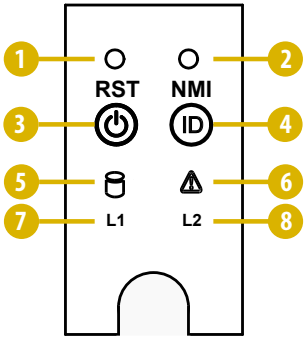

No.	Description
1	Reset button
2	NMI button
3	Power on/off button w/ LED
4	ID button w/ LED
5	Hard drive tray status LED (not available)
6	System event LED
7	LAN1 LED
8	LAN2 LED

Note: The functions are supported depending on the type of the server motherboard.

Reset Button

When the system is completely unresponsive, press the system reset button to reboot the server without shutting it off and initialize the system.

NMI (Nonmaskable Interrupt) Button

Press the NMI button with a paper clip or pin to generate a nonmaskable interrupt and to put the server in a halt state for exmanition.

Power On/Off Button

Press the power switch button to toggle the system power on and power off modes. To remove all power from the system completely, disconnect the power cord from the server.

ID Button

Press the ID button to toggle the front panel ID LED and the baseboard ID LED on and off. Use this button to locate the server working on behind a rack of servers.

Status LED Definitions

Power LED	
Status	**Description**
Off	Power off
Green	Power on

ID LED	
Status	**Description**
Off	System identification is disabled.
Blue	System identification is active.

System Event LED	
Status	**Description**
Off	Running or normal operation
Amber	Signal error

LAN1 and LAN2 LEDs	
Status	**Description**
Amber	Link between system and network or no access
Blinking Amber	Network access

2.6 PSU LED

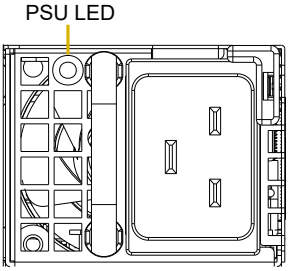

PSU Status LED	
Status	**Description**
Off	No AC power to all power supplies
Green	Output ON and OK
Blinking Green at 1Hz	PSU standby state AC preset / Only +5VSB on
Blinking Green at 2Hz	Power supply FW updating (bootloader mode)
Red	Power supply critical event causing a shutdown, failure, over current, short circuit, over voltage, fan failure, over temperature
Blinking Red at 1Hz	AC cord unplugged or AC power lost with a second power supply in parallel still with AC input power
Blinking 1 Second Red and 1 Second Green	Power supply warning events where the power supply continues to operate; high temp, high power, high current, slow fan

2.7 Hard Drive Tray LED

Southco Drive Tray

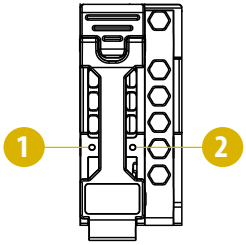

Chenbro Drive Tray

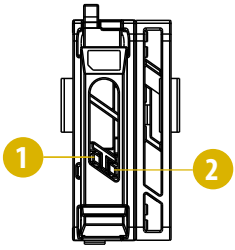

No.	Description
1	Hard drive tray activity LED (green)
2	Hard drive tray status LED (amber)

Chapter 3 Hardware Installation and Maintenance

This chapter helps user to assemble the chassis and install components.

Before You Begin

Before working with the server, pay close attention to the "Important Safety Instructions" at the beginning of this manual.

Ensure the motherboard battery is installed before unplugging the power cord or installing/removing the motherboard. Failure to follow this precaution may result in physical injury or damage to motherboard components.

1. Make sure the server is powered off.
   Power down the server if it is still running.
   (1) Press the Power button to power off the server from full-power mode to standby-power (sleep) mode. The Power LED at the front turns from solid green to blinking green.
   (2) Disconnect the power cord first from the AC outlet and then from the server.
   The power LED turns off.

The server is not completely powered down when pressing the Power button on the front panel. The Power button lets the server toggle between Power On and Standby (Sleep) modes. Some internal circuitry remain active in the Standby mode. To remove all power from the system completely, be sure to disconnect the power cord from the server.

2. Ensure having a clean and stable working environment. Avoid dust and dirt because contaminants may cause malfunctions.
3. Ground properly before touching any system component. A discharge of static electricity may damage components. Wear a grounded wrist strap if available.

1. Some components are already pre-installed. Simply properly connect the relavant cables before or after installation.
2. Refer to the server motherboard user manual for instructions on how to install server mother-board components.

English

3.1 Server Top Cover

Removing the Server Top Cover

1. Before removing the top cover, power off the server and unplug the power cord.
2. The system must be operated with the chassis top cover installed to ensure proper cooling.

1. Loosen the screw of the latch and press the spring button on the latch.
2. Remove the screws securing the top rear cover to the chassis.
3. Push the cover toward the REAR of the chassis to release it from the locked position. Lift up and remove the cover.

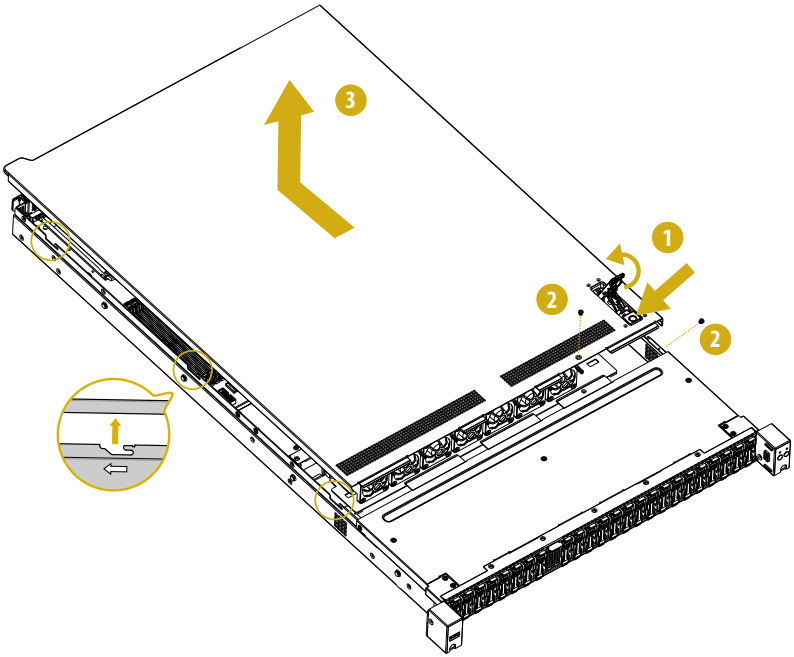

4. Remove the screws securing the top front cover to the chassis.
5. Push the cover toward the REAR of the chassis to release it from the locked position. Lift up and remove the cover.

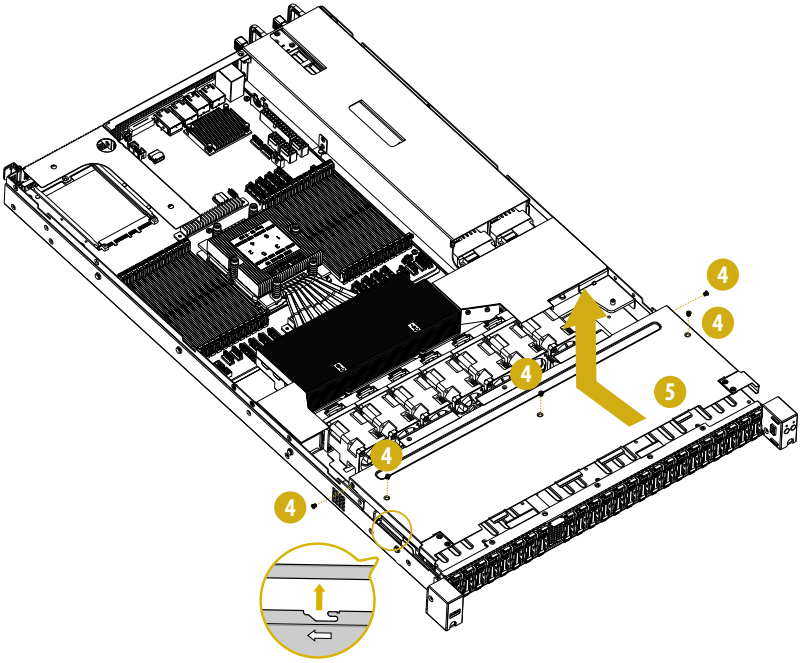

Installing the Server Top Cover

1. Lower the top front cover on the chassis, making sure the side latches align with the cutouts. Slide the cover toward the FRONT of the chassis.
2. Secure the cover in place with screws.

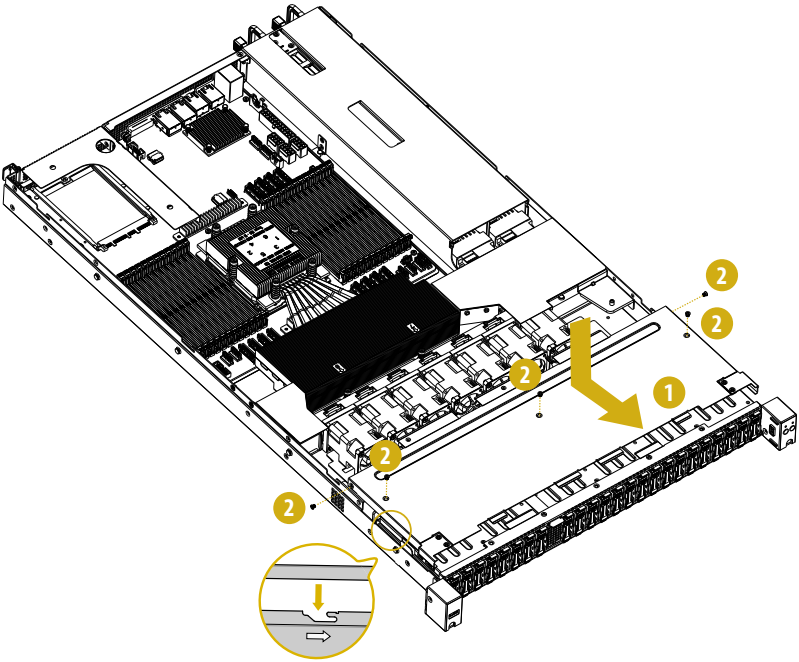

3. Lower the top rear cover on the chassis, making sure the side latches align with the cutouts. Slide the cover toward the FRONT of the chassis.
4. Press down the latch and tighten the screw to confirm the cover is locked with the chassis.
5. Secure the cover in place with screws.

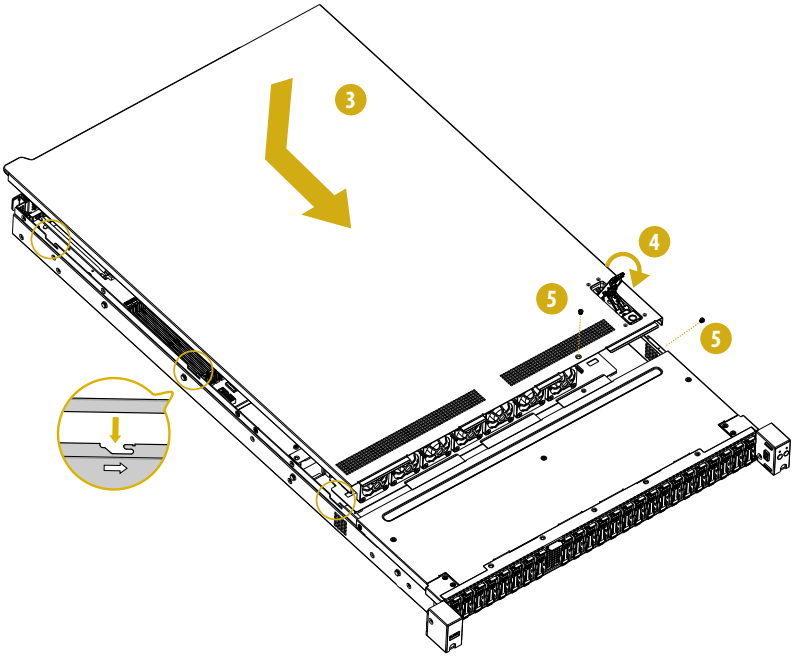

3.2 SSD (E1.S Drive)

Installing the E1.S Drive into the Southco Drive Bay

1. Take out the Southco drive trays and M2.5 screws from the accessory box. Place the E1.S drive to the tray and secure them with two screws.

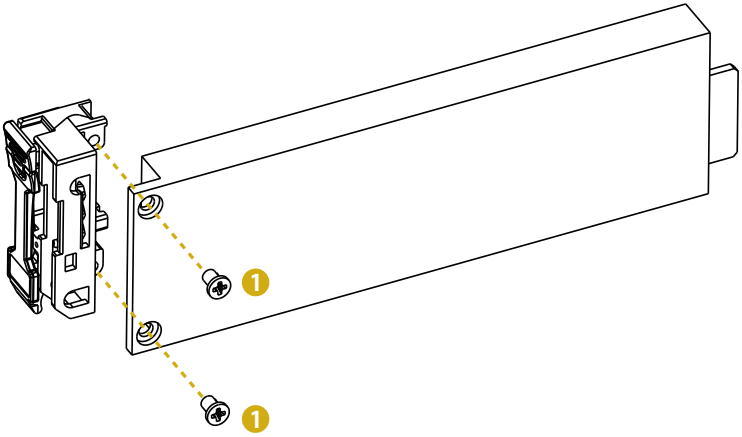

2. Slide the E1.S assembly into the drive bay until it is fully seated.
3. Push in the lever to lock the E1.S assembly in place.

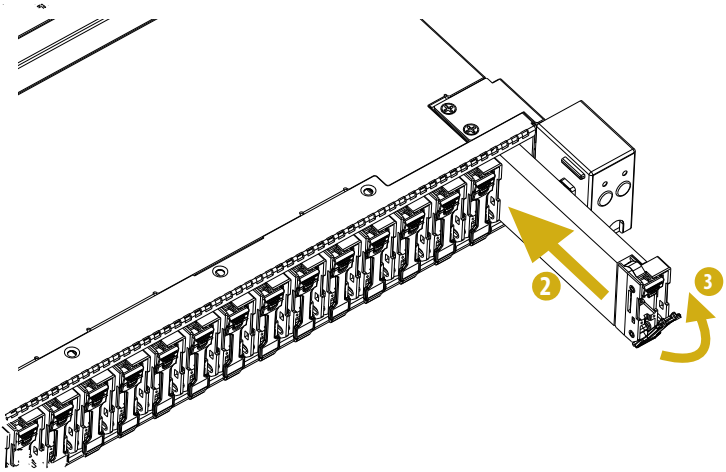

Intalling the E1.S Drive into the Chenbro Drive Bay

1. Press the latch on the E1.S locking cover to unlock the lever.
2. Hold the lever to pull out the locking cover and dummy.

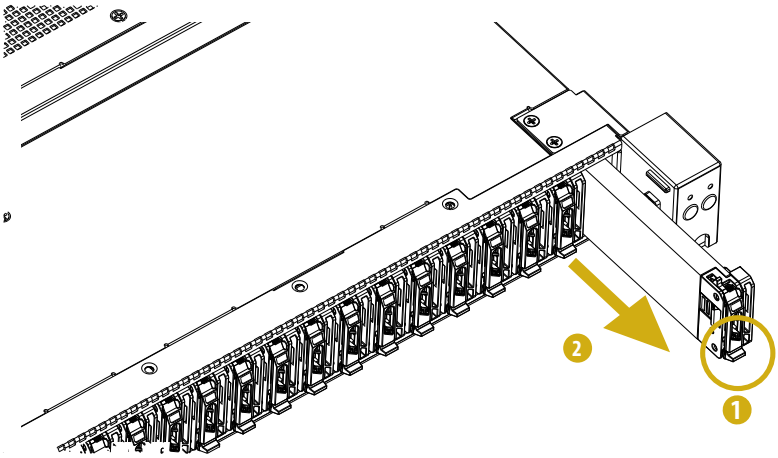

3. Remove the screws to disassemble the locking cover and dummy.

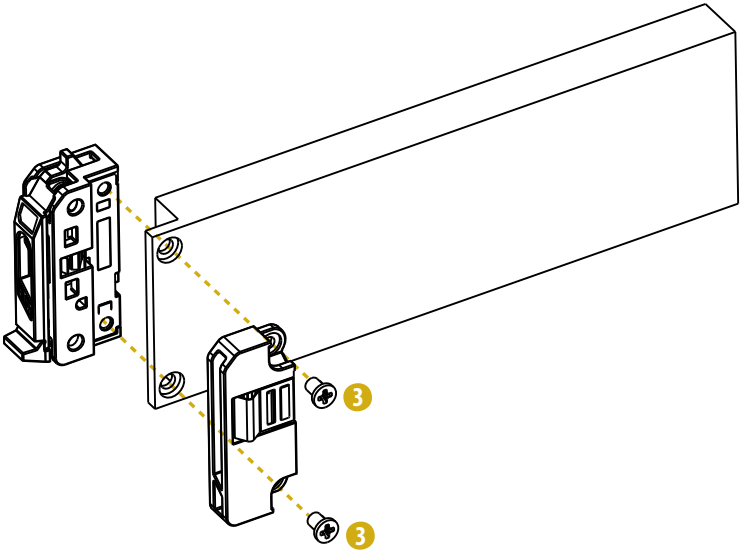

4. Install the E1.S drive to the locking cover with two screws.

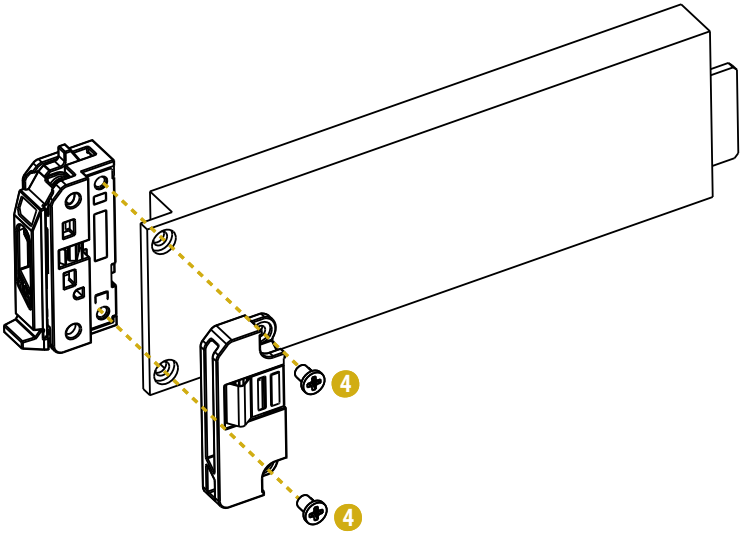

5. Slide the E1.S assembly into the drive bay until it is fully seated.
6. Push in the lever to lock the E1.S assembly in place.

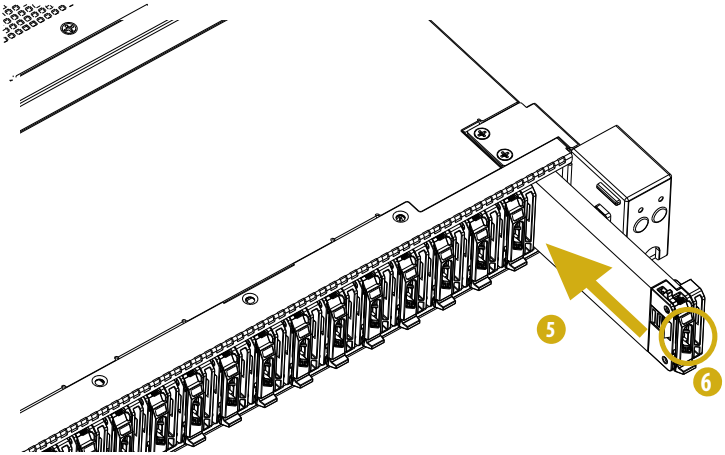

3.3 Power Supply

The system can accommodate two power supply units in the bay at the rear of the chassis. Each unit provides up to 1600W of power. One PSU is required for full load operation, with the other PSU purely as a redundant, load-sharing backup. One PSU can be removed without affecting system operation.

1. Before replacing the power supply, power off the server, unplug the power cord, and disconnect all wiring from the power supply.
2. In a redundant system, it does not need to power down the server.

Removing the Power Supply Unit

To remove a failed power supply unit, identify the failed PSU by checking the power supply LEDs on the PSU.

1. Hold onto the power supply handle while pressing the locking lever towards the power supply handle.
2. Pull to remove the PSU from the chassis.

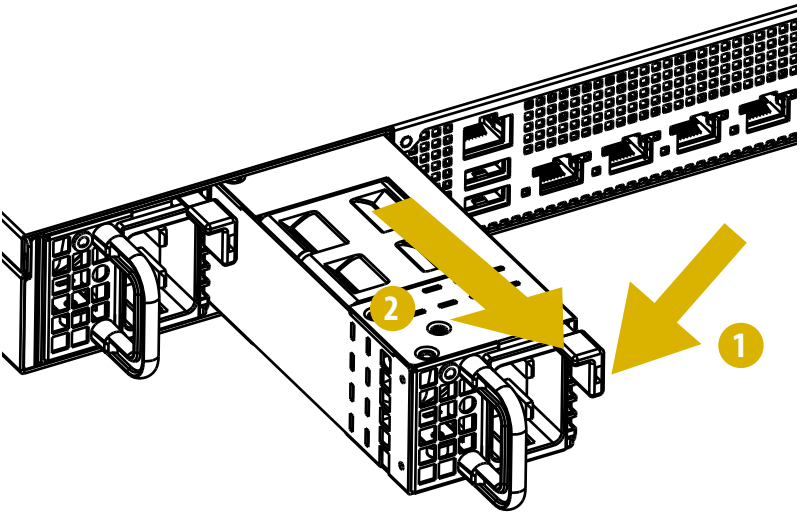

Note: The illustration is for references only. The actual PSU may be slightly different by models.

Installing the Power Supply Unit

1. Align the PSU with the power supply bay.
2. Carefully slide the PSU all the way into the bay until the PSU clicks into place.

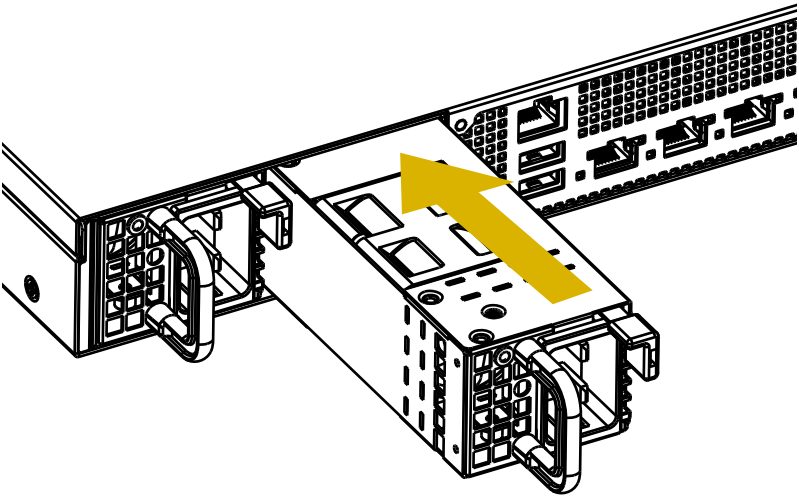

Using the Cable Clamp to Secure the Power Cord

1. Connect the power cord to the power supply unit.
2. Push the cube behind the cable clamp outward and slide the cable clamp down the cable tie.
3. Use the cable clamp to tie the power cord firmly.
4. Push the cable clamp up to secure power cord.

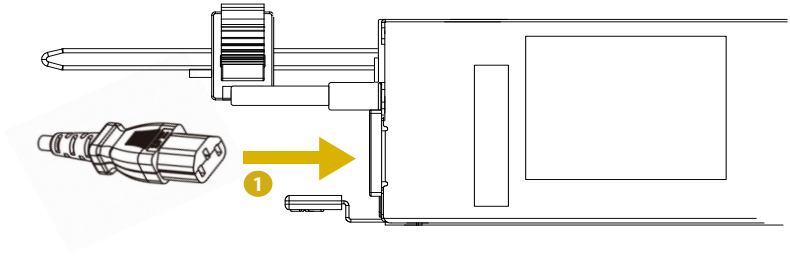

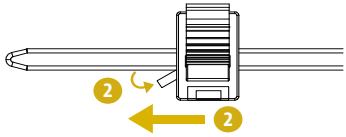

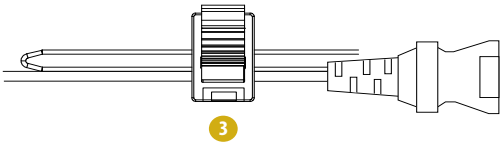

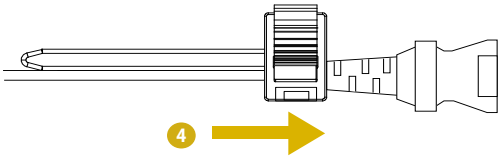

3.4 System Fan

Replacing the Fan

Press and hold the fan clip on to replace the fan.

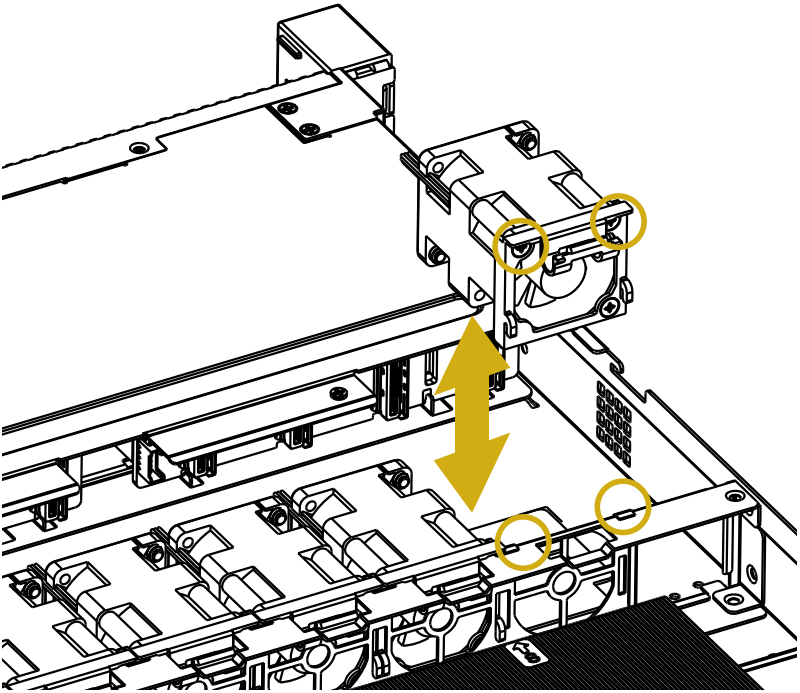

3.5 Add-in Card (GPU Card)

1. Lift up and remove the riser-card bracket from the chassis.

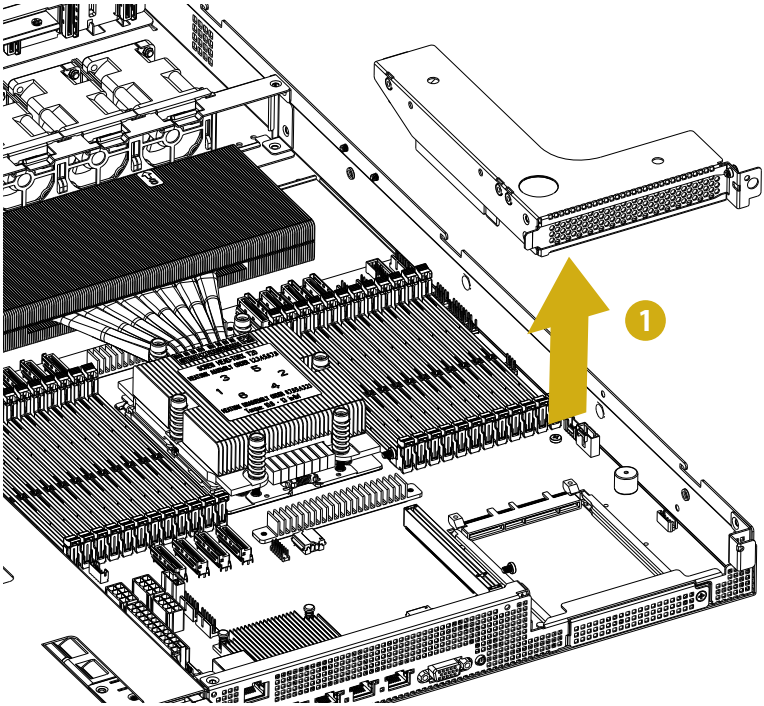

2. Remove the screw securing the blanking plate on the bracket.
3. Slide the blanking plate out sideways.

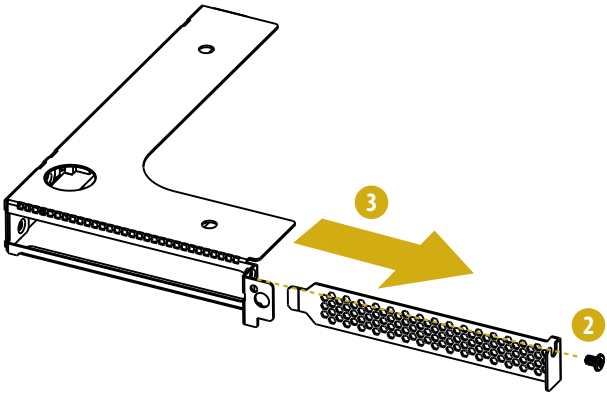

4. Install the add-in card to the bracket.
5. Secure the add-in card to the bracket with the screw.

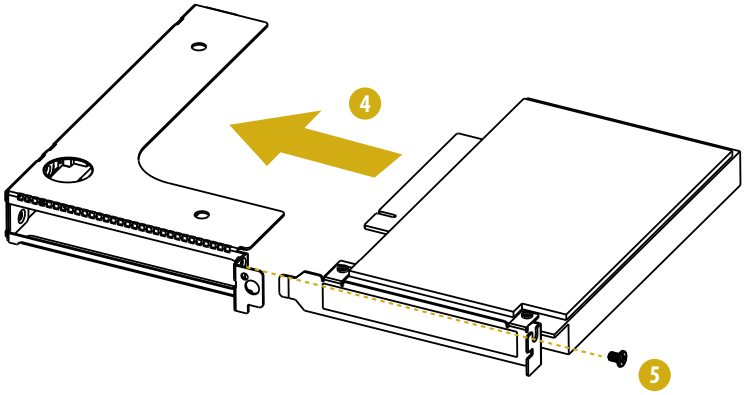

6. Align the add-in card assembly with the opening of the chassis. Place it into the chassis.

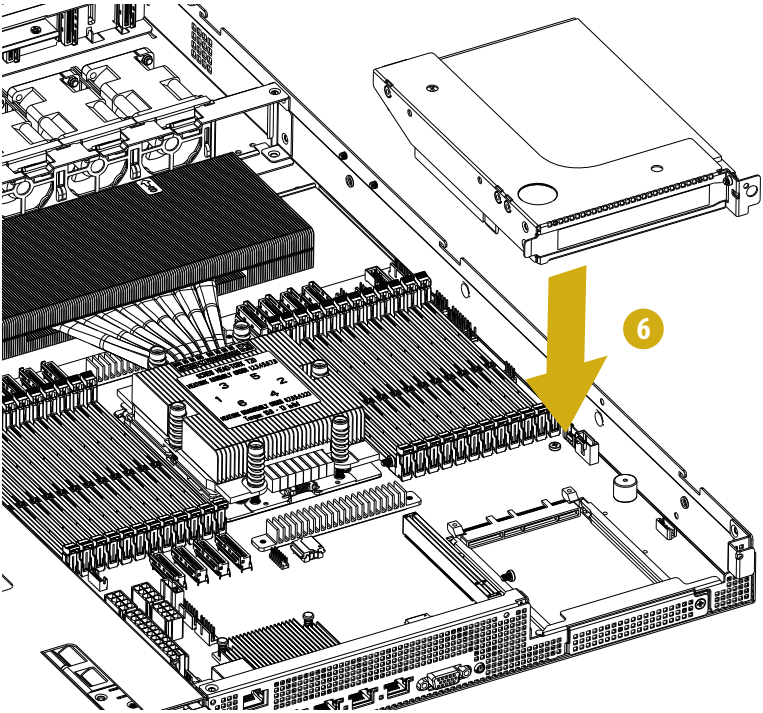

3.6 OCP Card

Installing the OCP Card

1. Remove the screw securing the slot cover to the chassis.
2. Remove the slot cover.

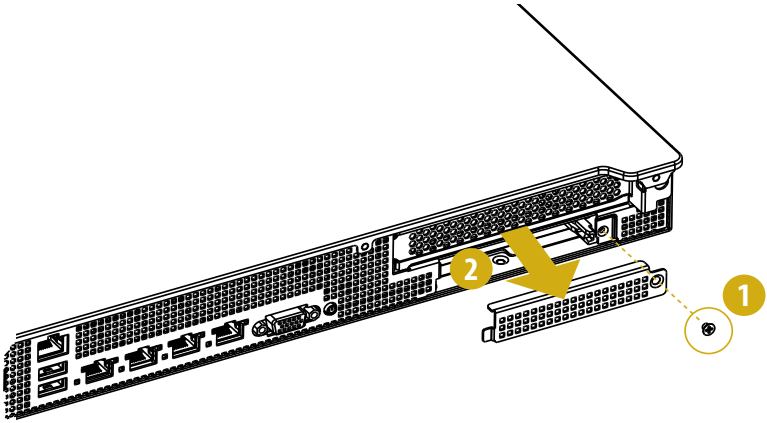

3. Install the OCP card into the slot.
4. Make sure the card is well seated and hand-tighten the thumbscrew on the face plate.

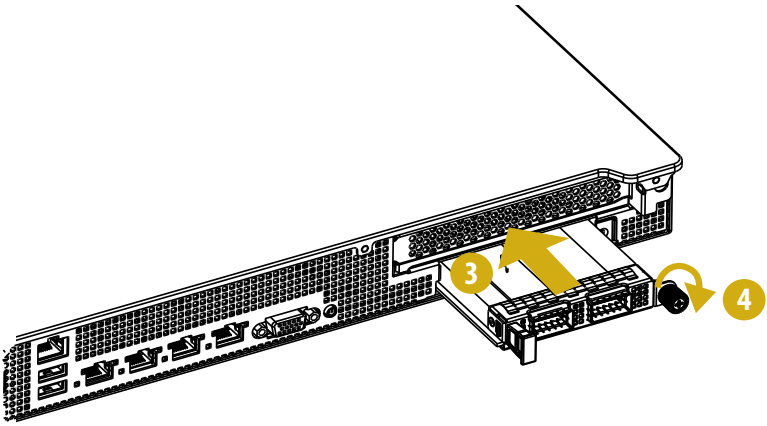

English

3.7 EVAC

EVAC (Enhanced Volume Air Cool Solution) is a heatsink module used for improving CPU cooling capability and memory cooling balance.

Installing the EVAC

1. Place the heatsink on the chassis. To avoid damaging the heat pipe, make sure to hold both the main part and outrigger simultaneously when assembling the EVAC.
2. Set the torque wrench to 4.8-5.2 lb-in. Tighten the screws one fourth a turn each time in a sequential order 1 > 2 > 3 > 4 > 5 > 6 > 7 > 8.
   Note: Loosen the screws in a reverse order.

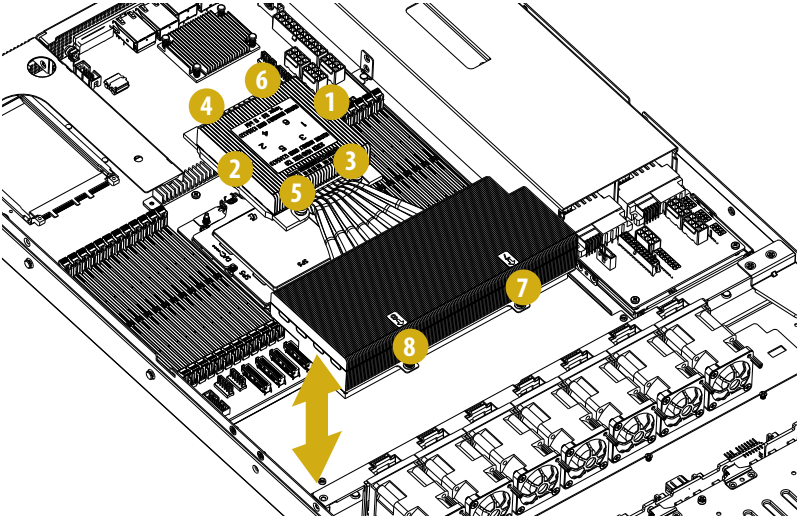

3.8 Air Duct

Installing the Air Duct

1. Align the air duct over the heat sink and carefully lower the air duct in place.
2. Align the duct cover over the air duct and fasten it to the air duct.

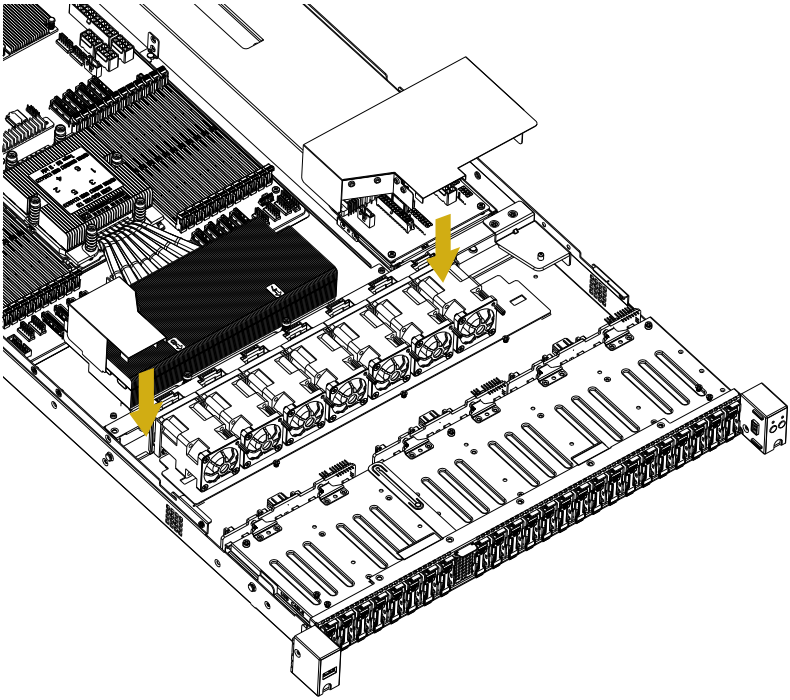

Note: The illustration is for references only. The actual air ducts may be slightly different by products.

Chapter 4 Server Motherboard (GENOAD24QM32-2L2T/BCM)

4.1 Layout

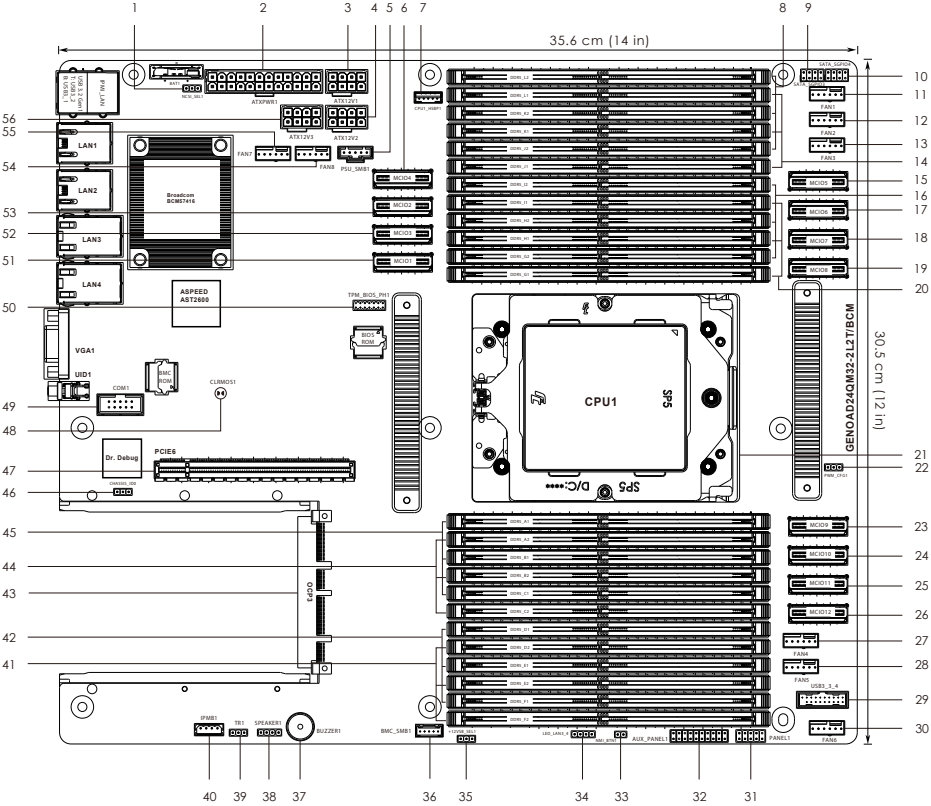

The illustration here is for references only. The actual layout may slightly vary depending on the model and the version used.

English

No.	Description
1	NCSI mode jumper (NCSI_SEL1)
2	ATX power connector (ATXPWR1)
3	ATX 12V power connector (ATX12V1)
4	ATX 12V power connector (ATX12V2)
5	PSU SMBus header (PSU_SMB1)
6	Mini cool edge IO connector (PCIe5.0 x8) (MCIO4)
7	Backplane PCI Express hot-plug connector (CPU1_HSBP1)
8	3 288-pin DDR5 DIMM slots (DDR5_J2, DDR5_K2, DDR5_L2)
9	SATA SGPIO connector (SATA_SGPIO3)
10	SATA SGPIO connector (SATA_SGPIO4)
11	System fan connector (FAN1)
12	System fan connector (FAN2)
13	System fan connector (FAN3)
14	3 288-pin DDR5 DIMM slots (DDR5_J1, DDR5_K1, DDR5_L1)
15	Mini cool edge IO connector (PCIe5.0 x8) (MCIO5)
16	3 288-pin DDR5 DIMM slots (DDR5_G2, DDR5_H2, DDR5_I2)
17	Mini cool edge IO connector (PCIe5.0 x8) (MCIO6)
18	Mini cool edge IO connector (PCIe5.0 x8 or 8 SATA 6Gb/s) (MCIO7)
19	Mini cool edge IO connector (PCIe5.0 x8 or 8 SATA 6Gb/s) (MCIO8)
20	3 288-pin DDR5 DIMM slots (DDR5_G1, DDR5_H1, DDR5_I1)
21	AMD socket SP5 (LGA6096) (CPU1)
22	PWM configuration header (PWM_CFG1)
23	Mini cool edge IO connector (PCIe5.0 x8) (MCIO9)
24	Mini cool edge IO connector (PCIe5.0 x8) (MCIO10)
25	Mini cool edge IO connector (PCIe5.0 x8) (MCIO11)
26	Mini cool edge IO connector (PCIe5.0 x8) (MCIO12)
27	System fan connector (FAN4)
28	System fan connector (FAN5)
29	USB 3.2 Gen1 header (USB3_3_4)
30	System fan connector (FAN6)
31	System panel header (PANEL1)
32	Auxiliary panel header (AUX_PANEL1)
33	Nonmaskable interrupt button (NMI_BTN1)
34	Front LAN LED connector (LED_LAN3_4)

No.	Description
35	OCP3 +12VSB power jumper (+12VSB_SEL1)
36	BMC SMBus header (BMC_SMB1)
37	Buzzer (BUZZER1)
38	Speaker header (SPEAKER1)
39	Thermal sensor header (TR1)
40	Intelligent platform management bus header (IPMB1)
41	3 288-pin DDR5 DIMM slots (DDR5_D2, DDR5_E2, DDR5_F2)
42	3 288-pin DDR5 DIMM slots (DDR5_D1, DDR5_E1, DDR5_F1)
43	OCP NIC 3.0 slot (PCIe5.0 x16) (OCP3)
44	3 288-pin DDR5 DIMM slots (DDR5_A2, DDR5_B2, DDR5_C2)
45	3 288-pin DDR5 DIMM slots (DDR5_A1, DDR5_B1, DDR5_C1)
46	Chassis ID jumper (CHASSIS_ID0)
47	PCI Express 5.0 x16 slot (PCIE6)
48	Clear CMOS pad (CLRMOS1)
49	COM port header (COM1)
50	SPI TPM header (TPM_BIOS_PH1)
51	Mini cool edge IO connector (PCIe5.0 x8) (MCIO1)
52	Mini cool edge IO connector (PCIe5.0 x8) (MCIO3)
53	Mini cool edge IO connector (PCIe5.0 x8) (MCIO2)
54	System fan connector (FAN8)
55	System fan connector (FAN7)
56	ATX 12V power connector (ATX12V3)

4.2 Block Diagram

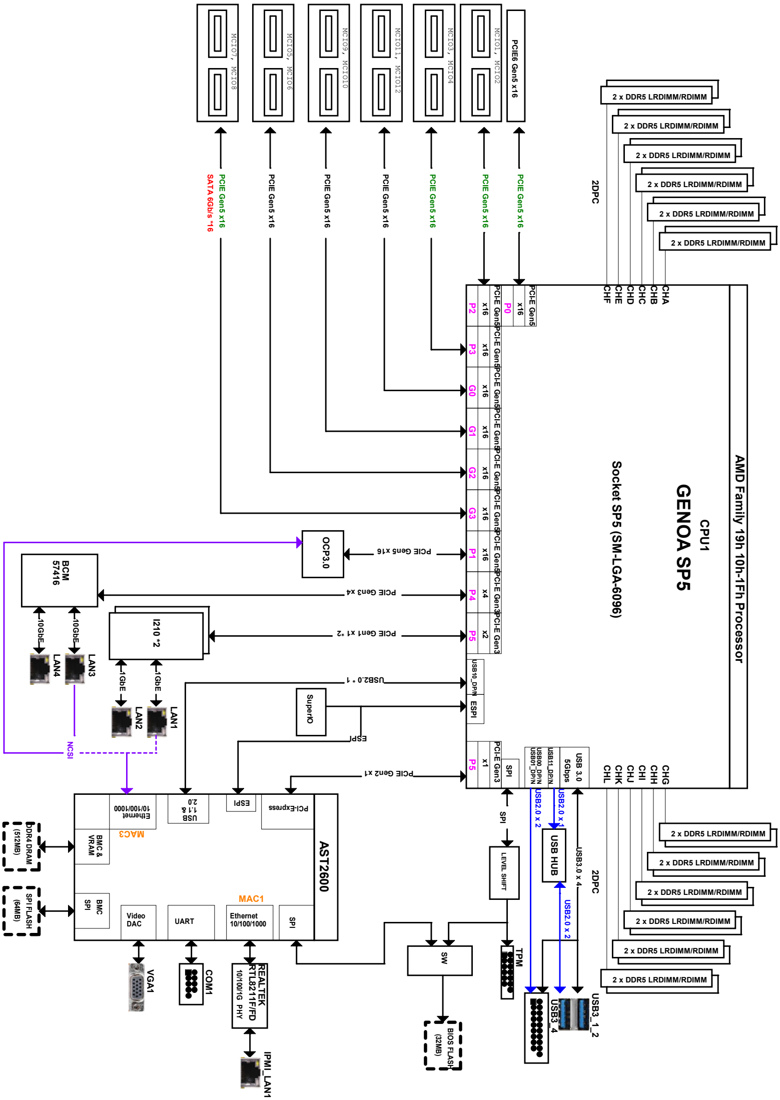

4.3 Installing the CPU and Heatsink (LGA 6096 Socket)

1. *Before inserting the CPU into the socket, check if the PnP cap is on the socket, if the CPU surface is unclean, or if there are any bent pins in the socket. Do not force to insert the CPU into the socket if above situation is found. Otherwise, the CPU will be seriously damaged.*
2. *Unplug all power cables before installing the CPU.*

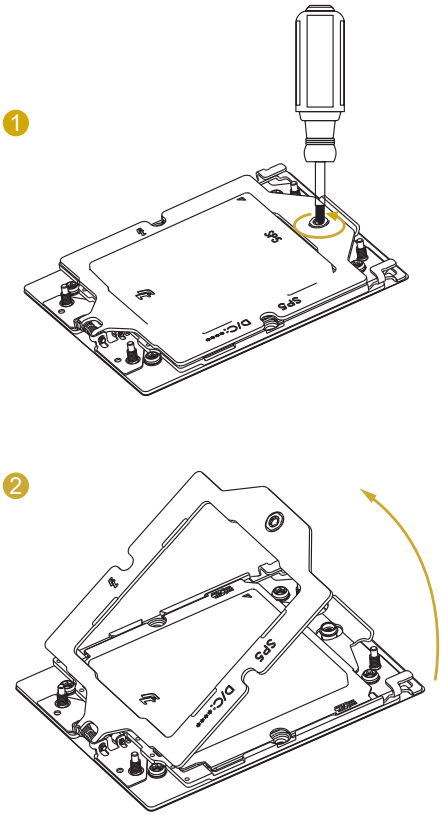

3

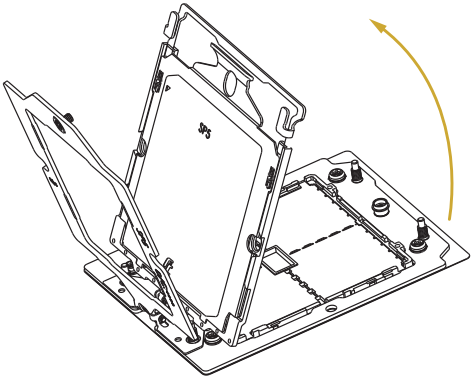

4

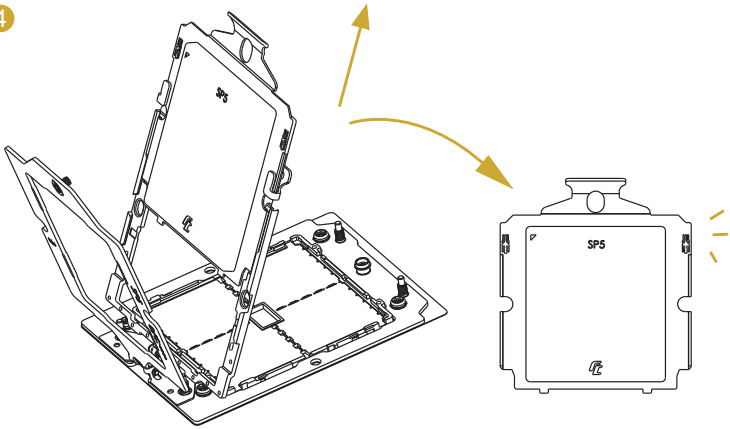

5

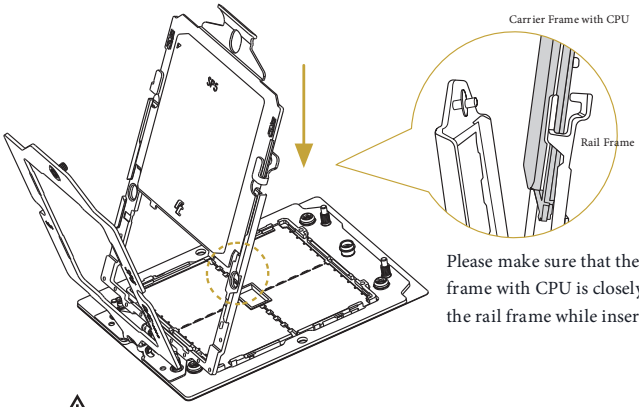

Please make sure that the carrier frame with CPU is closely attached to the rail frame while inserting it.

⚠ Install the carrier frame with CPU. Don't separate them.

6

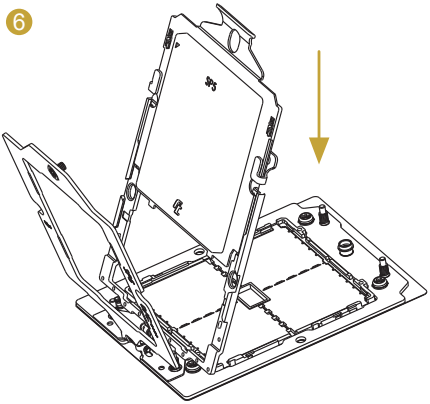

7

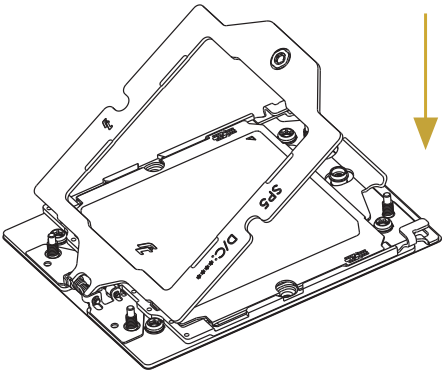

8

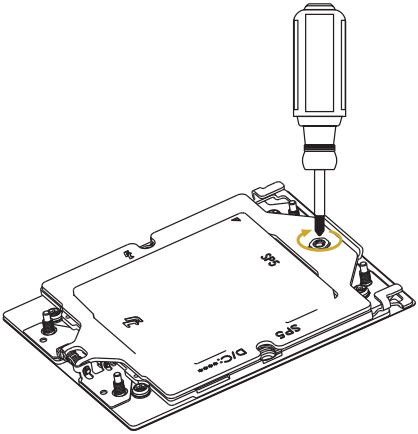

9

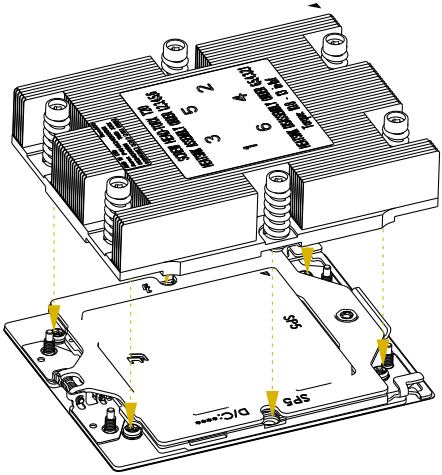

10

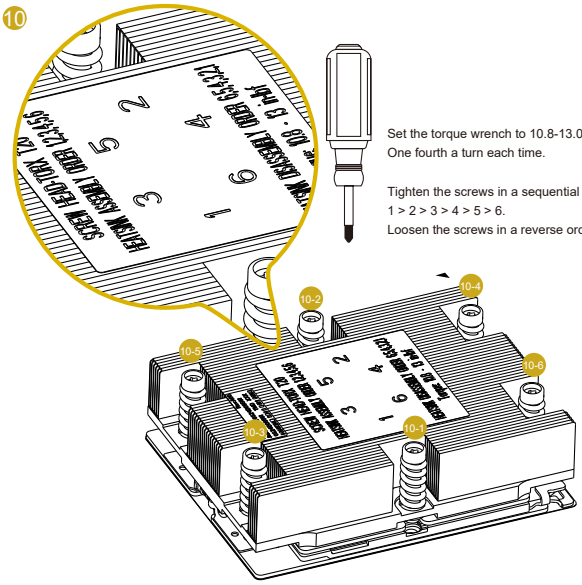

Set the torque wrench to 10.8-13.0 in-lb.
One fourth a turn each time.

Tighten the screws in a sequential order
1 > 2 > 3 > 4 > 5 > 6.
Loosen the screws in a reverse order.

English

4.4 Installing the Memory Modules (DIMM)

The DIMM only fits in one correct orientation. It will cause permanent damage to the server motherboard and the DIMM if forcing the DIMM into the slot at incorrect orientation. For more information about DIMM installation, refer to the server motherboard user manual.

1

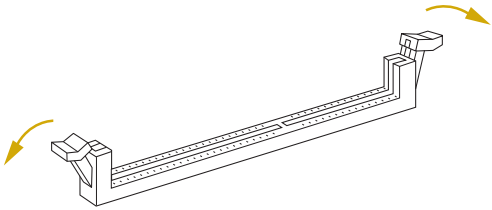

2

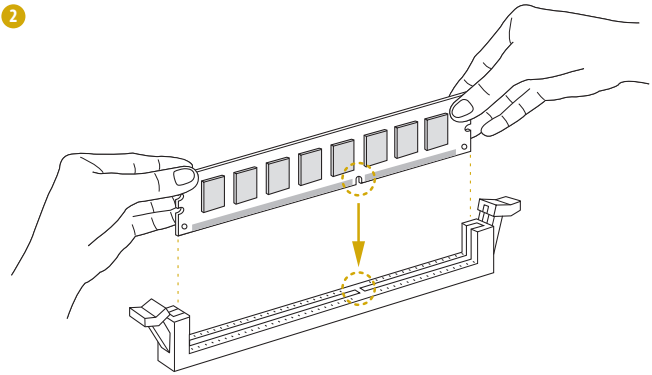

3

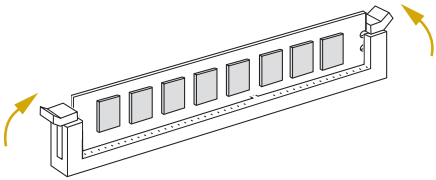

English

Appendix

Installing the Server in a Rack

This section describes how to rackmount the server with slide rail assembly.

The rails installation instructions in this manual are example only, the actual rail assembly procedure may differ slightly.

The rail assembly consists of outer, middle and inner rail.

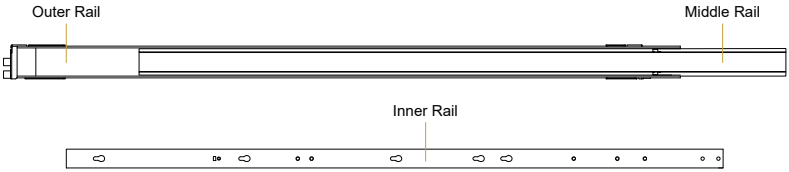

Some slide rails are labeled with either L or R, please identify prior to rail installation. Install the rail labeled with L on the left side of rack, and the rail labeled with R on the right side.

1. Fully extend the inner rail from the rail assembly.

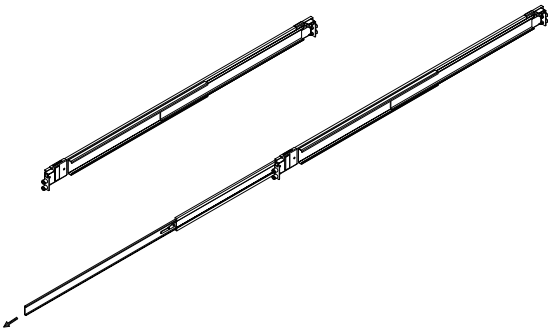

English

2. Press the release lever on the inner rail to remove it.

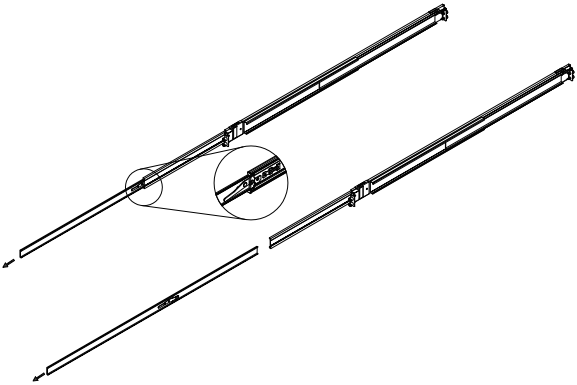

3. Attach the inner rail to the chassis.
   (1) Lift the clip on the inner rail.
   (2) Slide the inner rail toward the chassis rear.
   (3) Secure the inner rail to the chassis with screw.

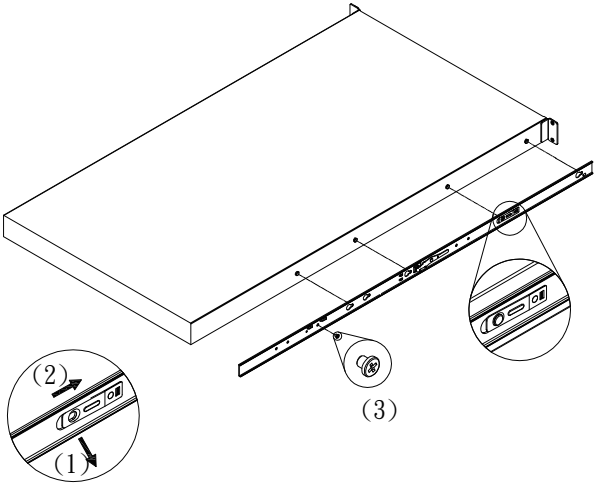

4. Attach the outer rail to the chassis.
   (1) Lift lever, aim the rack mount pin to the rack post and push forward.

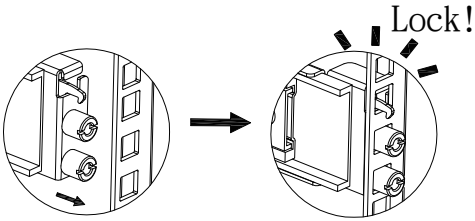

   (2) Lift lever, aim the rack mount pin to the rack post and pull back.

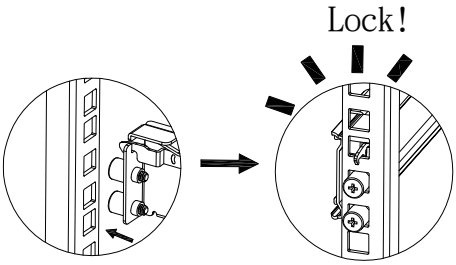

5. Make sure the outer rail is locked to rack securely.
6. Fully extend the middle rail out of the outer rail until locked.

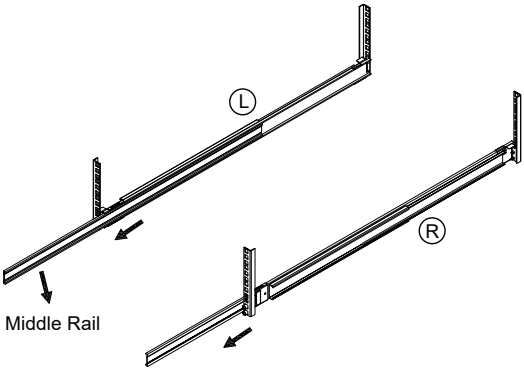

7. Aim the rail to push server into rack.

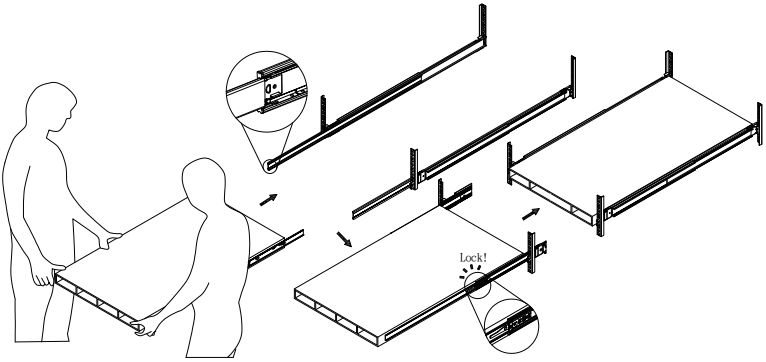

The server is heavy. For safe lifting, two or more persons are required to install the server into the rack.

8. Tighten the thumbscrews on the front of server to secure the server to the rack.
9. To remove the server from the rack, reverse these instructions.

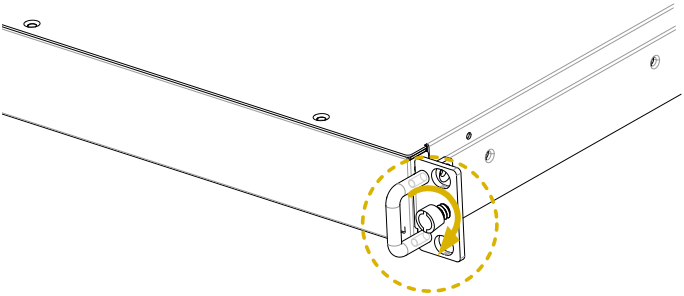

When connecting cables to the server, make sure there is enough cable slack so sliding the server in and out of the rack without accidentally unplugging a cable.

Contact Information

Contact ASRock Rack or want to know more about ASRock Rack, you're welcome to visit ASRock Rack's website at http://www.asrockrack.com; or contact the dealer for further information. For technical questions, please submit a support request form at https://event.asrockrack.com/tsd.asp

ASRock Rack Incorporation

e-mail: ASRockRack_sales@asrockrack.com

ASRock Rack EUROPE B.V.

Bijsterhuizen 11-11
6546 AR Nijmegen
The Netherlands
Phone: +31-24-345-44-33

ASRock Rack America, Inc.

4331 Eucalyptus Ave, Chino, CA 91710 U.S.A.
Phone: +1-909-590-8308
Fax: +1-909-590-1026