**OPEN**
Industry Standard, Flexible Architecture

**GREEN**
Less Heat, Less Power Consumption

**STABLE**
Robust Design, Quality Parts

Stable and
Reliable Solution

Server/Workstation
Motherboard

# 1U12E-TURIN/EVAC

## User Manual

English

Version 1.00
Published Jan. 2026
Copyright©2026 ASRock Rack Inc. All rights reserved.

## Copyright Notice:

No part of this documentation may be reproduced, transcribed, transmitted, or translated in any language, in any form or by any means, except duplication of documentation by the purchaser for backup purpose, without written consent of ASRock Rack Inc.

Products and corporate names appearing in this documentation may or may not be registered trademarks or copyrights of their respective companies, and are used only for identification or explanation and to the owners' benefit, without intent to infringe.

## Disclaimer:

Specifications and information contained in this documentation are furnished for informational use only and subject to change without notice, and should not be constructed as a commitment by ASRock Rack. ASRock Rack assumes no responsibility for any errors or omissions that may appear in this documentation.

With respect to the contents of this documentation, ASRock Rack does not provide warranty of any kind, either expressed or implied, including but not limited to the implied warranties or conditions of merchantability or fitness for a particular purpose.

In no event shall ASRock Rack, its directors, officers, employees, or agents be liable for any indirect, special, incidental, or consequential damages (including damages for loss of profits, loss of business, loss of data, interruption of business and the like), even if ASRock Rack has been advised of the possibility of such damages arising from any defect or error in the documentation or product.

This device complies with Part 15 of the FCC Rules. Operation is subject to the following two conditions:

(1) this device may not cause harmful interference, and
(2) this device must accept any interference received, including interference that may cause undesired operation.

## CALIFORNIA, USA ONLY

The Lithium battery adopted on this server motherboard contains Perchlorate, a toxic substance controlled in Perchlorate Best Management Practices (BMP) regulations passed by the California Legislature. When you discard the Lithium battery in California, USA, please follow the related regulations in advance.
"Perchlorate Material-special handling may apply, see www.dtsc.ca.gov/hazardouswaste/perchlorate"

**ASRock Rack's Website: www.ASRockRack.com**

## Setting up the Server in a Restricted Access Location/Restricted Access Area

- Access can only be gained by service persons or by users who have been instructed about the reasons for the restrictions applied to the location and about any precautions that shall be taken.
- Access is through the use of a tool or lock and key, or other means of security, and is controlled by the authority responsible for the location.
- Leave enough clearance (25 inches in the front and 30 inches in the back of the rack) to allow the front door to be opened completely and to allow for sufficient airflow.
- This product is for installation merely in a Restricted Access Location.
- This product is not suitable for use with visual display work place devices according to §2 of the the German Ordinance for Work with Visual Display Units.
- Only skilled person and Instructed person can remove the chassis covers to access the inside of the system.

## Replaceable Batteries

**CAUTION**

**RISK OF EXPLOSION IF BATTERY IS REPLACED BY AN INCORRECT TYPE.**

**DISPOSE OF USED BATTERIES ACCORDING TO THE INSTRUCTIONS**

## Warning

When removal of the chassis lid required for servicing:

- Turn off power and unplug any power cords/cables, and
- Reinstall the chassis lid before restoring power.

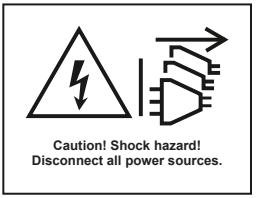


## Important Safety Instructions

Pay close attention to the following safety instructions before performing any of the operation. Basic safety precautions should be followed to protect yourself from harm and the product from damage:

- Operation of the product should be carried out by suitably trained, qualified, and certified personnel only to avoid risk of injury from electrical shock or energy hazard.
- Disconnect the power cord from the wall outlet when installing or removing main system components, such as the server motherboard and power supply unit.
- Place the system on a stable and flat surface.
- Use extreme caution when working with high-voltage components.
- When handling parts, use a grounded wrist strap designed to prevent static discharge.
- Keep the area around the system clean and clutter-free.
- Keep all components and printed circuit boards (PCBs) in their antistatic bags when not in use.
- Handle a board by its edges only; do not touch its components, peripheral chips, memory modules or contacts.
- The power cord must be connected to a socket or outlet with a ground connection.

Contents


Chapter 1 Introduction 1

1.1 Shipping Box Contents 2

1.2 Specifications 3

Chapter 2 Server System Overview 6

2.1 System Components 6

2.2 Internal Features 7

2.3 System Front Panel 9

2.4 System Rear Panel 9

2.5 I/O Panel 10

2.6 LED 14

Chapter 3 Hardware Installation and Maintenance 16

3.1 Server Top Cover 17

3.2 Hard Drive 21

3.3 Power Supply 23

3.4 System Fan 25

3.5 Add-in Card 26

3.6 OCP Card 28

3.7 EVAC 29

3.8 Air Duct 30

Chapter 4 Server Motherboard 31

4.1 Layout 31

4.2 Block Diagram 34

4.3 Installing the CPU (LGA 6096 Socket) 35

4.4 Installing the Memory Modules (DIMM) 39

**Appendix 40**

Installing the Server in a Rack 40

# Chapter 1 Introduction

Thank you for purchasing 1U12E-TURIN/EVAC, a reliable barebone system produced under ASRock Rack's consistently stringent quality control. It delivers excellent performance with robust design conforming to ASRock Rack's commitment to quality and endurance.

This guide provides the instructions of insertion and extraction of chassis components, such as chassis covers, system fans, power supplies, hard drive trays, and other main components this system supports. If the system is pre-installed a server motherboard, refer to the server motherboard user manual for the information of the server motherboard components, specifications and BIOS settings.

| System | ASRock Rack Server Motherboard |
|---|---|
| 1U12E-TURIN/EVAC | TURIND12M3-NL/500W/1U12E |

*Because the hardware specifications might be updated, the content of this documentation will be subject to change without notice.*

*The illustrations shown in this manual are for reference purposes only and may not exactly match the model purchased.*

*If requiring technical support related to this system, please visit the website for specific information about the using model.*
*http://www.asrockrack.com/support/*

English

## 1.1 Shipping Box Contents

| Items | Quantity |
|---|---|
| Server Barebone: 1U12E-TURIN/EVAC | 1 |
| CPU EVAC Heatsink | 1 |
| Rail Kit | 1 |
| Accessory Box<br>- 2 Power Cords<br>- 2 M.3 Screws for M.2 Sockets | 1 |

*If any items are missing or appear damaged, contact the authorized dealer.*

## 1.2 Specifications

| 1U12E-TURIN/EVAC | |
|---|---|
| System | |
| Form Factor | 1U Rackmount |
| Dimension | 776.5 x 438 x 43.5mm (30.6" x 17.2" x 1.7") |
| Support MB | TURIND12M3-NL/500W/1U12E |
| Front Panel | |
| Button | Power button, reset button, ID button |
| LED | Power, system event, ID, hard drive activity (M.2 only) |
| I/O Port | 1 Type-A (USB3.2 Gen1) |
| External Drive Bay / Storage | |
| Front Side Drive Bay | 12 Hot-swap 2.5" NVMe (PCIe5.0 x4) drive bays |
| Front Side Backplane | 12-port NVMe passive backplane |
| Internal Side | 2 M-key (PCIe5.0 x4 or SATA 6Gb/s), supports 22110/2280/2260 form factor |
| Power Supply | |
| Type | 1+1 Hot-swap slim RPSU |
| Output Watt | 1000W @ 100-120Vac input<br>1600W @ 200-240Vac input |
| Efficiency | 80-PLUS Platinum |
| AC Input | Low-line: 100-120Vrms, 50/60Hz<br>High-line: 200-240Vrms, 50/60Hz |
| System Fan | |
| Fan | 7 PWM hot-swap 40x56mm fans |
| Processor System | |
| CPU | Supports AMD EPYC™ 9005/9004 (with AMD 3D V-Cache™ Technology) and 97x4 series processors |
| Socket | Single Socket SP5 (LGA 6096) |
| Thermal Design Power | Up to 500W |
| Chipset | System on Chip |

| | |
|---|---|
| System Memory | |
| Supported DIMM Quantity | 12 DIMM slots (1DPC) |
| Supported Type | Supports DDR5 288-pin RDIMM, RDIMM-3DS |
| Max. Capacity per DIMM | RDIMM: 128GB (2Rx4)<br>RDIMM-3DS: 256GB (2Rx4) |
| Max. DIMM Frequency | 6400MHz |
| Voltage | 1.1V |
| PCIe Expansion Slot | |
| PCIe x16 | 1 FHHL PCIe5.0 / CXL2.0* x16<br>*Supports CXL1.1 while installing AMD EPYC 9004 (with AMD 3D V-Cache™ Technology) and 97x4 series processors |
| Ethernet | |
| OCP Slot | 1 OCP NIC 3.0 (PCIe5.0 x16) |
| Server Management | |
| BMC Controller | ASPEED AST2600 |
| IPMI Dedicated GLAN | 1 Realtek RTL8211F for dedicated management GLAN |
| Graphics | |
| Controller | ASPEED AST2600 |
| VRAM | DDR4 512MB |
| Rear I/O | |
| Video Port | 1 DB15 (VGA) |
| Serial Port | 1 DB9 (COM) |
| USB3.2 Gen1 Port | 2 Type-A (USB3.2 Gen1) |
| RJ45 | 1 Dedicated IPMI |
| System BIOS | |
| BIOS Type | AMI UEFI BIOS; 256Mb (32MB) SPI Flash ROM |
| BIOS Features | ASRock Rack Instant Flash, ACPI 6.4 and above compliance wake up events, SMBIOS 3.5.0 and above, Plug and Play (PnP) |

| Hardware Monitor | |
|---|---|
| Temperature | CPU, MB temperature sensing |
| Fan | CPU/Rear/Front fan tachometer<br>CPU quiet fan (allows chassis fan speed auto-adjust by CPU temperature)<br>CPU/Rear/Front fan multi-speed control |
| Voltage | VOLT_3VSB, VOLT_5VSB, VOLT_VCORE0, VOLT_VCORE1, VOLT_P0_VSOC, VOLT_VDD_11, VOLT_VDDIO, VOLT_VDD_33, VOLT_VDD_18, VOLT_BAT, VOLT_3V, VOLT_5V, VOLT_12V |
| **Environment** | |
| Temperature | Operation temperature: 10°C ~ 35°C<br>Non operation temperature: -40°C ~ 70°C |
| Humidity | Non operation humidity: 20% ~ 90% (non condensing) |

*The functions are supported depending on the type of the server motherboard. Refer to the server motherboard user manual for more information.*

# Chapter 2 Server System Overview

This chapter provides diagrams showing the location of important components of the server system.

## 2.1 System Components

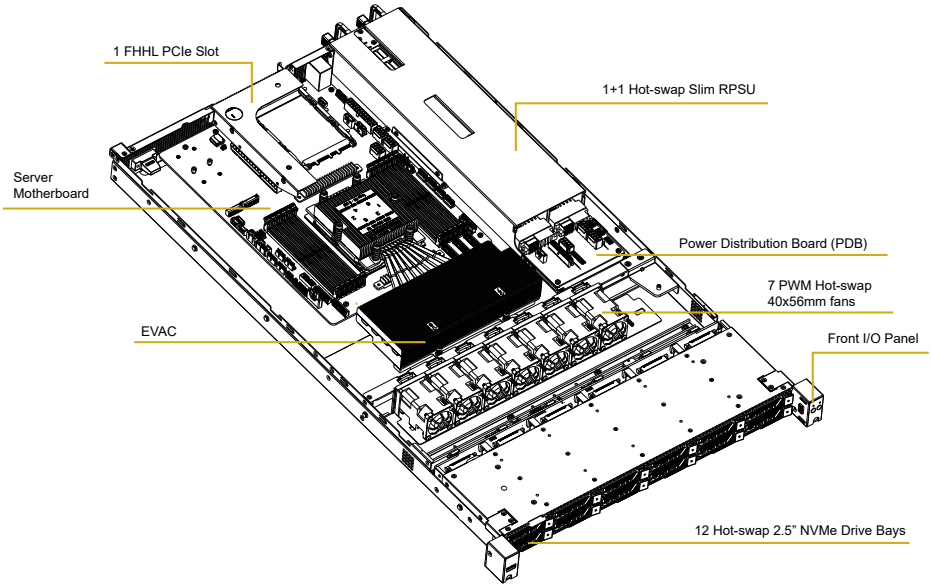


English

## 2.2 Internal Features

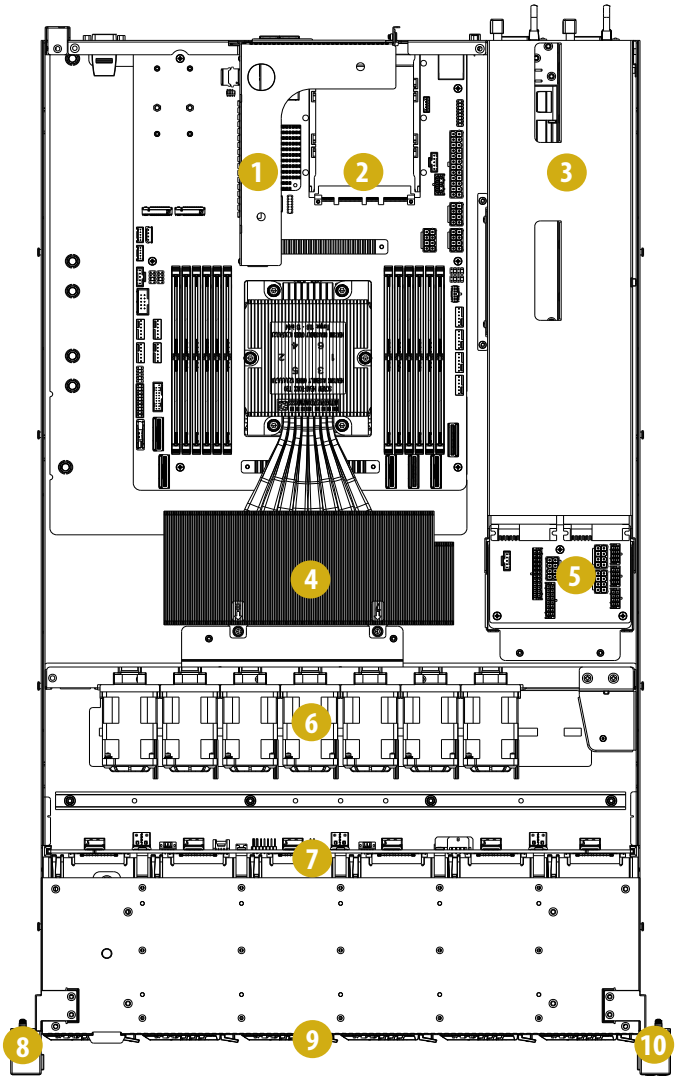

| No. | Description |
|---|---|
| 1 | 1 FHHL PCIe5.0 / CXL2.0* x16 slot<br>*Supports CXL1.1 while installing AMD EPYC 9004 (with AMD 3D V-Cache™ Technology) and 97x4 series processors |
| 2 | Server motherboard (MB) |
| 3 | 1+1 Hot-swap Slim RPSU |
| 4 | EVAC |
| 5 | Power distribution board (PDB) |
| 6 | 7 PWM hot-swap 40x56mm fans (FAN7 ~ FAN1) |
| 7 | Hard drive backplane board (BPB) |
| 8 | 1 Type-A (USB3.2 Gen1) port |
| 9 | 12 Hot-swap 2.5" NVMe (PCIe5.0 x4) drive bays |
| 10 | Front I/O panel |

## 2.3 System Front Panel

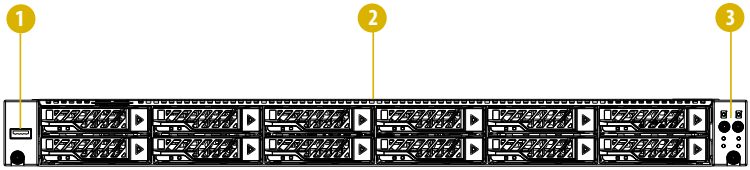


| No. | Description |
|---|---|
| 1 | 1 Type-A (USB3.2 Gen1) port |
| 2 | 12 Hot-Swap 2.5" NVMe (PCIe5.0 x4) drive bays<br>**Top:** NVMe2, NVMe4, NVMe6, NVMe8, NVMe10, NVMe12<br>**Bottom:** NVMe1, NVMe3, NVMe5, NVMe7, NVMe9, NVMe11 |
| 3 | Front I/O panel |

## 2.4 System Rear Panel

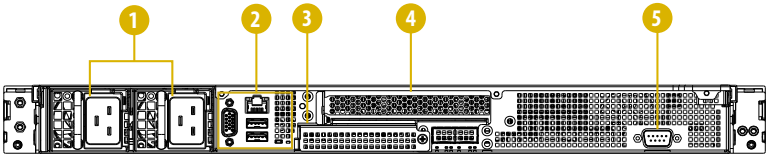


| No. | Description |
|---|---|
| 1 | 1+1 Hot-swap Slim RPSU |
| 2 | Rear I/O panel (depends on the specification of the server motherboard) |
| 3 | 1 OCP NIC 3.0 (PCIe5.0 x16) slot |
| 4 | 1 FHHL PCIe5.0 / CXL2.0* x16 slot<br>*Supports CXL1.1 while installing AMD EPYC 9004 (with AMD 3D V-Cache™ Technology) and 97x4 series processors |
| 5 | 1 DB9 (COM) port |

## 2.5 I/O Panel

### Front I/O Panel

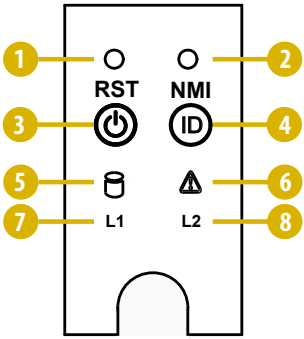


| No. | Description |
|---|---|
| 1 | Reset button |
| 2 | NMI button (not support) |
| 3 | Power button w/ LED |
| 4 | ID button w/ LED |
| 5 | Hard drive activity LED (M.2 only) |
| 6 | System event LED |
| 7 | LAN1 LED (not support) |
| 8 | LAN2 LED (not support) |

## Rear I/O Panel

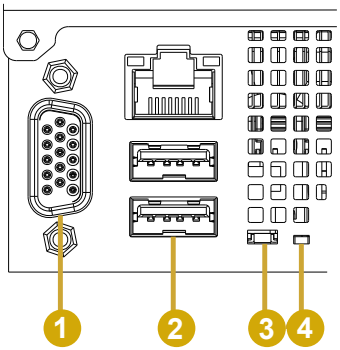


| No. | Description |
|---|---|
| 1 | 1 DB15 (VGA) port |
| 2 | **Top:** 1 Dedicated IPMI LAN port<br>**Bottom:** 2 Type-A (USB3.2 Gen1) ports |
| 3 | ID button |
| 4 | ID LED |

## Reset Button

When the system is completely unresponsive, press the system reset button to reboot the server without shutting it off and initialize the system.

## Power Button

Press the power switch button to toggle the system power on and power off modes. To remove all power from the system completely, disconnect the power cord from the server.

## ID Button

Press the ID button to toggle the front and rear ID LEDs on and off. Use this button to locate the server working on behind a rack of servers.

*1. Press and hold the ID button for 4 seconds, the BMC will trigger an external reset.*
*2. Press and hold the ID button for 10 seconds, the BMC will reset and load default values.*

## Status LED Definitions

| Power LED | |
|---|---|
| **Status** | **Description** |
| Off | Power off |
| Green | Power on |

| ID LED | |
|---|---|
| **Status** | **Description** |
| Off | System identification is disabled. |
| Blue | System identification is active. |

| Hard Drive Activity LED (M.2 only) | |
|---|---|
| **Status** | **Description** |
| Off | Hard drive inactive |
| Blinking Green | Hard drive active |

| System Event LED | |
|---|---|
| **Status** | **Description** |
| Off | BMC not alert |
| Red | BMC alert |

## Rear Dedicated IPMI LAN Port

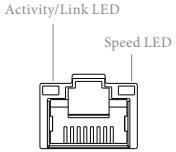


| Activity/Link LED | |
|---|---|
| **Status** | **Description** |
| Off | No link |
| Blinking Yellow | Data activity |
| On | Link |

| Speed LED | |
|---|---|
| **Status** | **Description** |
| Off | 10Mbps connection or no link |
| Orange | 100Mbps connection |
| Green | 1Gbps connection |

## 2.6 LED

### PSU LED

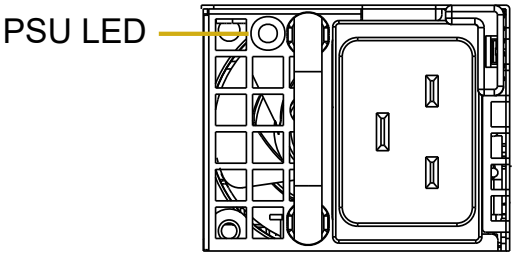


| Status | Description |
|---|---|
| Off | No AC power to all power supplies |
| Green | Output ON and OK |
| Blinking Green (1Hz) | PSU standby state AC preset / Only +5VSB on |
| Blinking Green (2Hz) | Power supply FW updating (Bootloader mode) |
| Red | Power supply critical event causing a shutdown, failure, over current, short circuit, over voltage, fan failure, over temperature |
| Blinking Red (1Hz) | AC cord unplugged or AC power lost with a second power supply in parallel still with AC input power |
| Blinking 1 Second Red and 1 Second Green | Power supply warning events where the power supply continues to operate; high temp, high power, high current, slow fan |

## Drive Tray LED

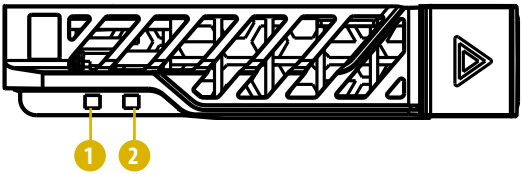


| No. | Description |
|---|---|
| 1 | Drive tray status LED |
| 2 | Drive tray activity LED |

## LED Definitions

| Status (No. 1) | Activity (No. 2) | Description |
|---|---|---|
| Off | Off | Drive not present |
| Blue | Green | Drive present but not active |
| Blue | Blinking Green (4Hz) | Drive present and active |
| Blinking Blue (4Hz) | Green | Locate (identify) |
| Red | Green | Fail |
| Blinking Red (1Hz) | Blinking Green (4Hz) | Rebuild |

# Chapter 3 Hardware Installation and Maintenance

This chapter helps user to assemble the chassis and install components.

## Before You Begin

Before working with the server, pay close attention to the "Important Safety Instructions" at the beginning of this manual.

1. *Ensure the motherboard battery is installed before unplugging the power cord or installing/removing the motherboard.*
2. *Before installing or removing any component, ensure that the power supply is off or the power cord is detached from the power supply. Failure to do so may cause severe damage to the motherboard, peripherals, and/or components.*

1. Make sure the server is powered off.
   Power down the server if it is still running.
   (1) Press the Power button to power off the server from full-power mode to standby-power (sleep) mode. The Power LED at the front turns from solid green to blinking green.
   (2) Disconnect the power cord first from the AC outlet and then from the server.
   The power LED turns off.

*The server is not completely powered down when pressing the Power button on the front panel. The Power button lets the server toggle between Power On and Standby (Sleep) modes. Some internal circuitry remain active in the Standby mode. To remove all power from the system completely, be sure to disconnect the power cord from the server.*

2. Ensure having a clean and stable working environment. Avoid dust and dirt because contaminants may cause malfunctions.
3. Ground properly before touching any system component. A discharge of static electricity may damage components. Wear a grounded wrist strap if available.

1. *Some components are already pre-installed. Simply properly connect the relavant cables before or after installation.*
2. *Refer to the server motherboard user manual for instructions on how to install server motherboard components.*

## 3.1 Server Top Cover

### Removing the Server Top Cover

*1. Before removing the top cover, power off the server and unplug the power cord.*
*2. The system must be operated with the chassis top cover installed to ensure proper cooling.*

1. Remove the screws securing the rear top cover to the chassis.
2. Loosen the screw on the locking tab and press the button to unlock the cover.
3. Push the cover toward the REAR of the chassis to release the cover from the locked position. Lift up and remove the cover.

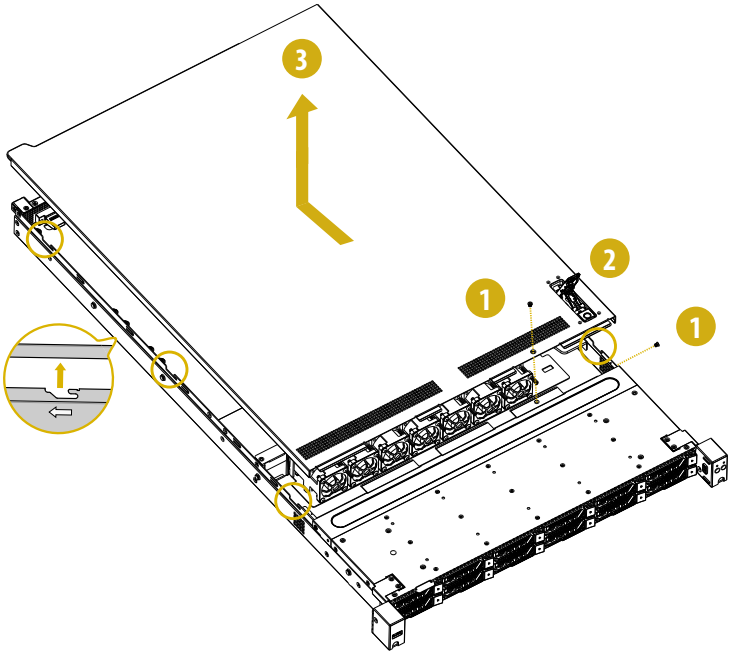

4. Remove the screws securing the middle cover to the chassis.
5. Lift up and remove the cover.

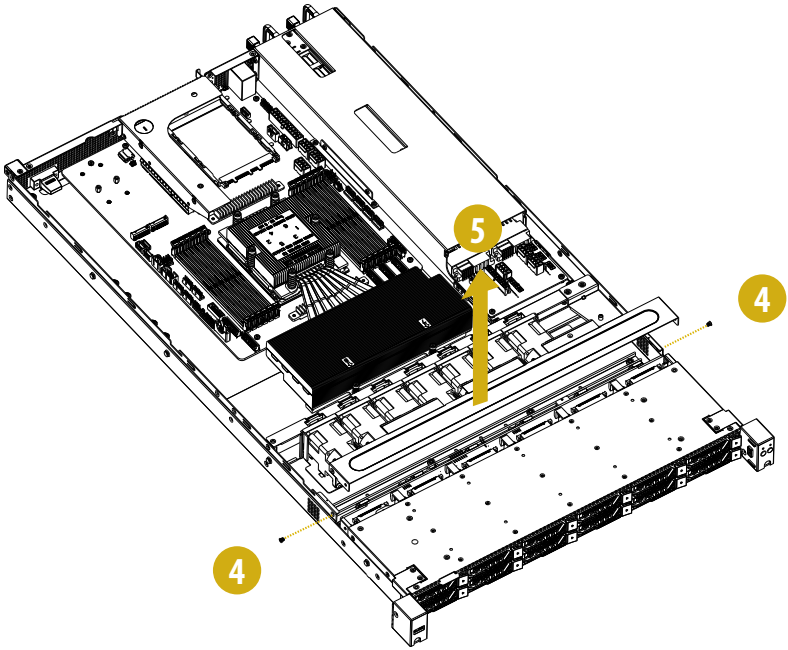

## Installing the Server Top Cover

1. Align and place the middle cover on the chassis.
2. Secure the cover in place with the screws.

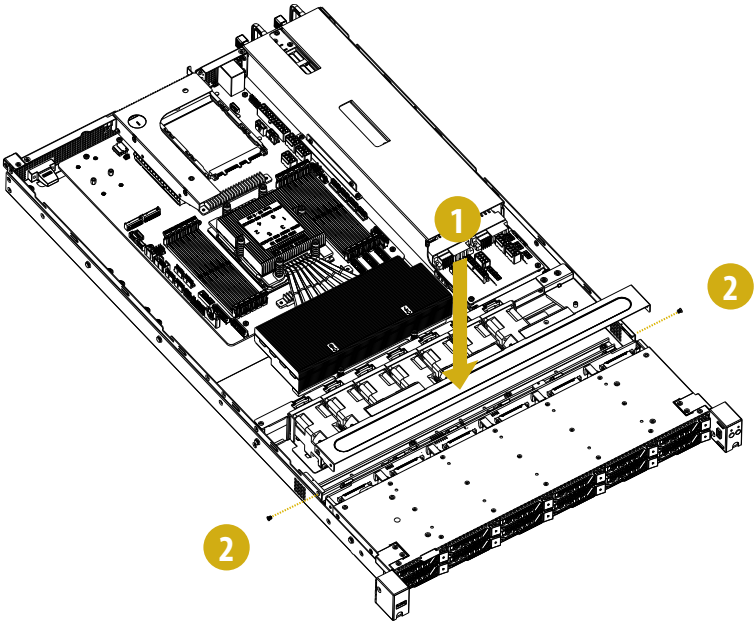

3. Lower the rear top cover on the chassis, making sure the side latches align with the cutouts. Slide the cover toward the FRONT of the chassis.
4. Press down the locking tab and tighten the screw.
5. Secure the cover in place with the screws.

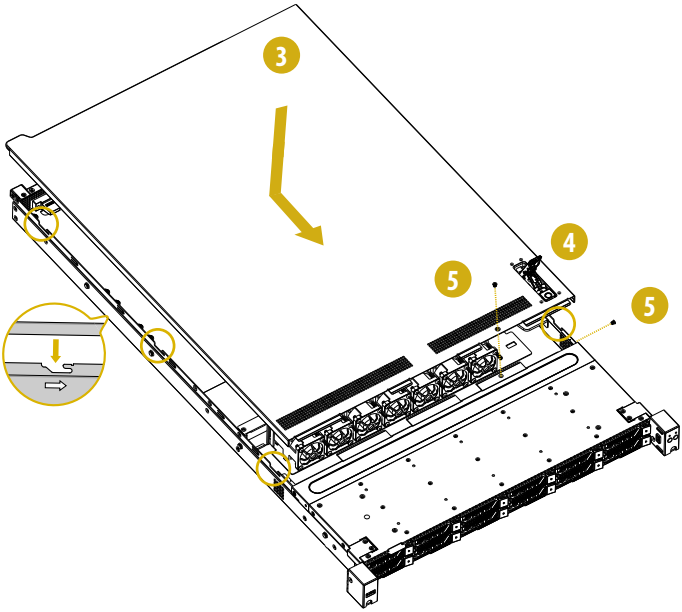

## 3.2 Hard Drive

### Removing Hard Drive Tray from the Chassis

1. Press the locking lever latch on the hard drive tray to unlock the retention lever.
2. Rotate the lever out and away from the module bay.

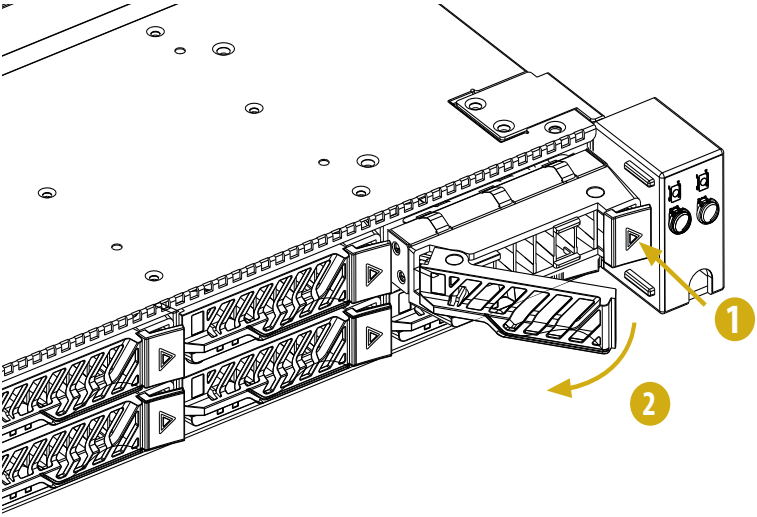


3. Pull the tray out.

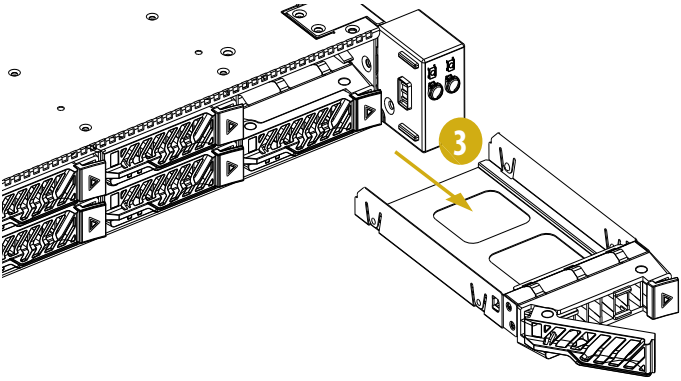

## Installing 2.5" Hard Drive to the Chassis

1. Place the hard drive into the hard drive tray with printed circuit board side facing down.
2. Secure the drive with the screws.
3. Slide the hard drive assembly into the hard drive bay until the assembly is fully seated.
4. Push in the locking lever to lock the assembly in place.

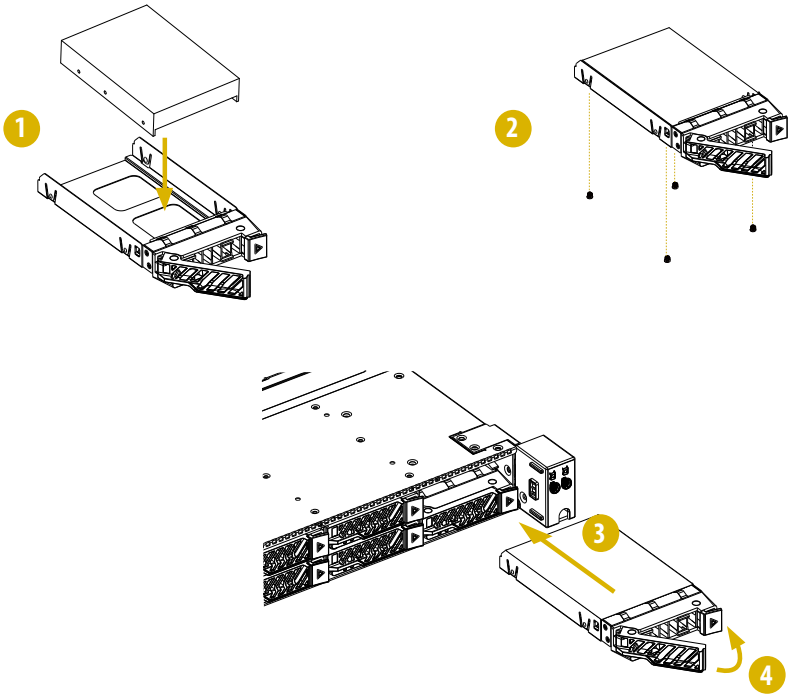

## 3.3 Power Supply

This system can accommodate 2 power supply units in the bay at the rear of the chassis. 1 PSU is required for full load operation, with the other PSU purely as a redundant, load-sharing backup. 1 PSU can be removed without affecting system operation.

### Removing the Power Supply Unit

To remove a failed power supply unit, identify the failed PSU by checking the power supply LEDs on the PSUs.

1. Hold onto the power supply handle while pressing the locking lever towards the power supply handle.
2. Pull to remove the PSU from the chassis.

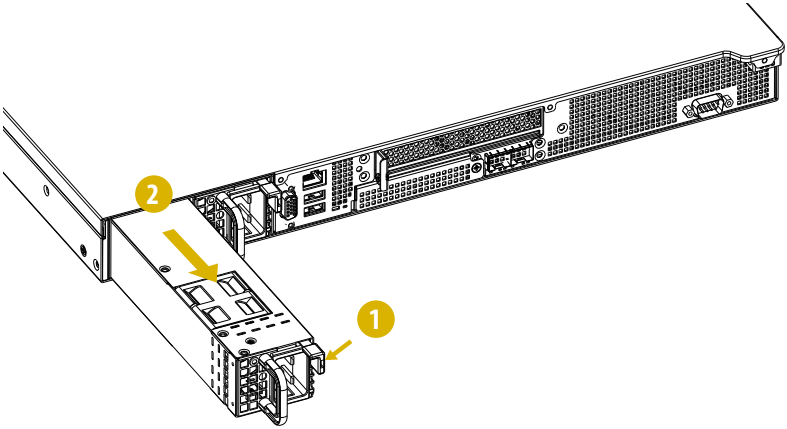

## Installing the Power Supply Unit

1. Align the power supply unit with the power supply bay.
2. Carefully slide the PSU all the way into the bay until the PSU clicks in place.

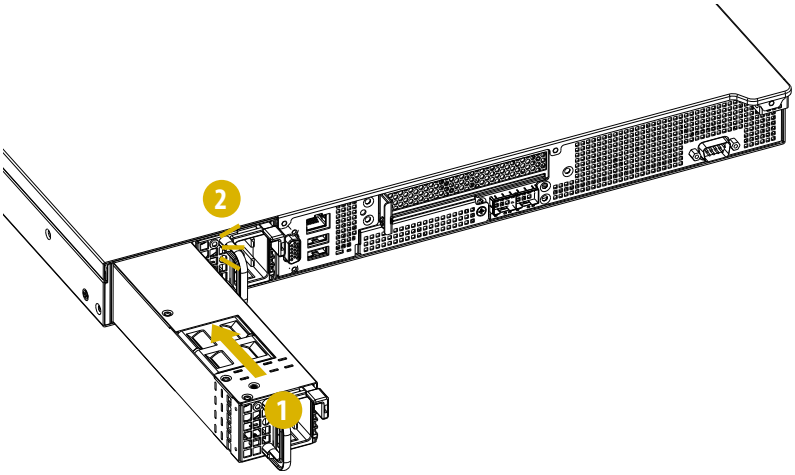

## 3.4 System Fan

### Replacing the Fan

Press and hold the fan clip on to replace the fan.

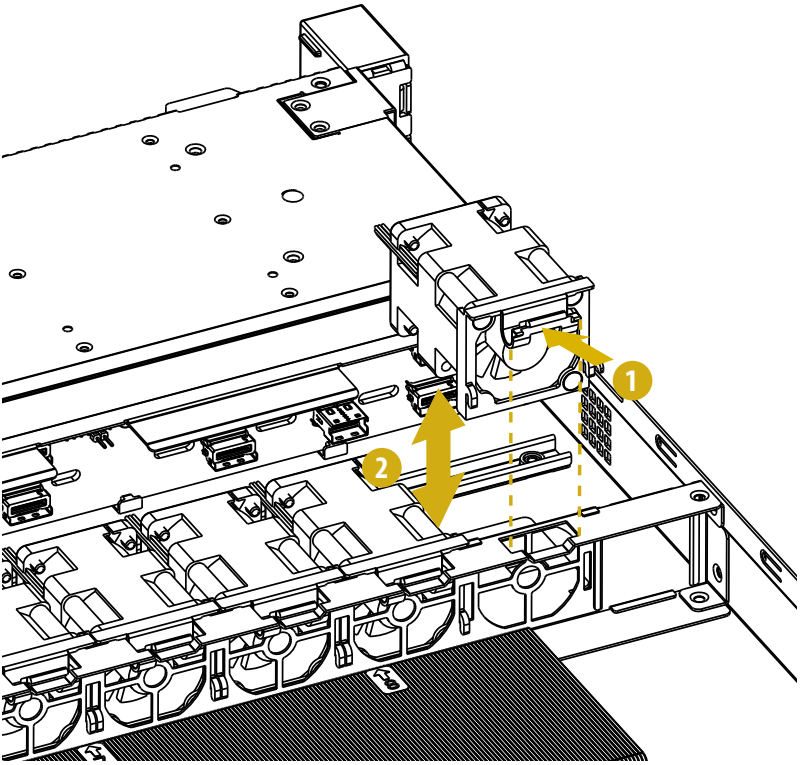

## 3.5 Add-in Card

*Before installing an add-in card, power off the server and unplug the power cord.*

### Installing the Add-in Card

1. Lift up and remove the bracket from the chassis.

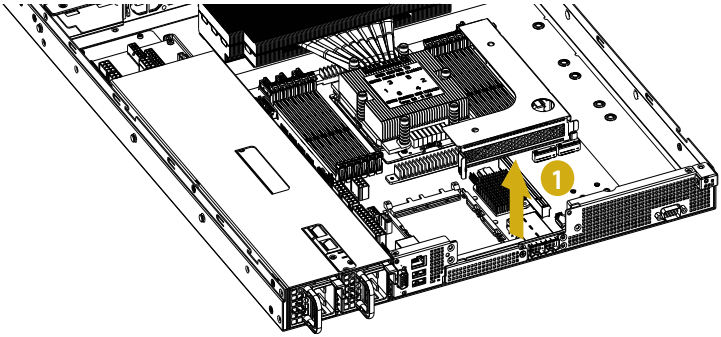


2. Remove the screw securing the blanking plate on the bracket.
3. Slide the blanking plate out sideways.

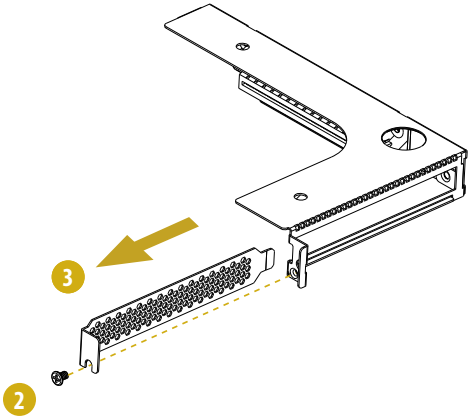


English

4. Install an add-in card to the bracket.
5. Secure the add-in card to the bracket with the screw.

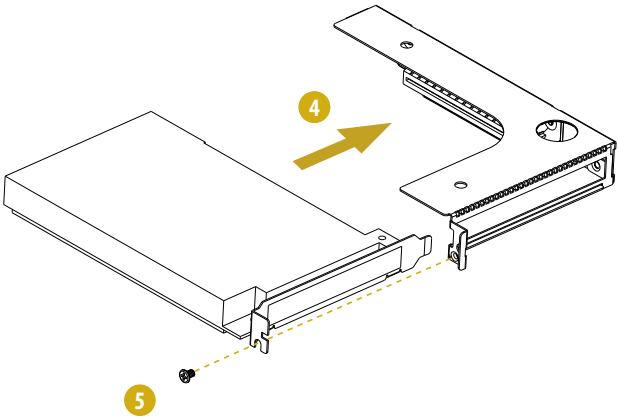


6. Align the add-in card assembly with the opening of the chassis to place it to the chassis.

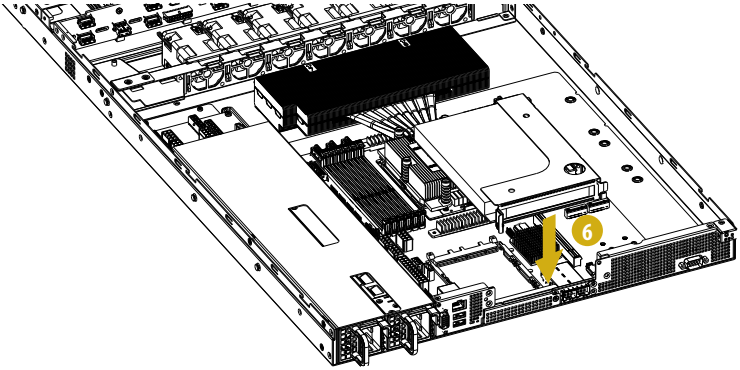

## 3.6 OCP Card

### Installing the OCP Card

1. Remove the screw securing the slot cover to the chassis.
2. Remove the slot cover.

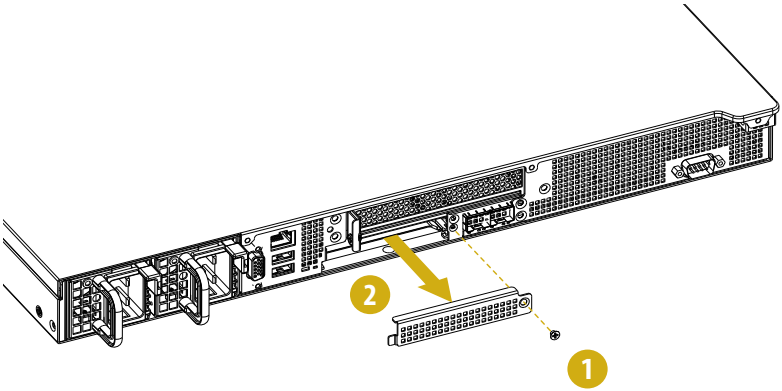


3. Install the OCP card into the slot.
4. Make sure the card is well seated and hand-tighten the thumbscrew on the face plate.

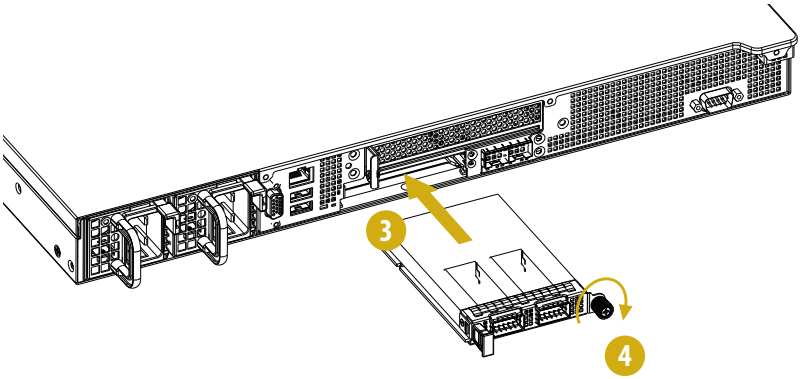

## 3.7 EVAC

EVAC (Enhanced Volume Air Cool Solution) is a heatsink module used for improving CPU cooling capability and memory cooling balance. The EVAC consists of CPU-side heatsink, heat pipe, and remote heatsink.

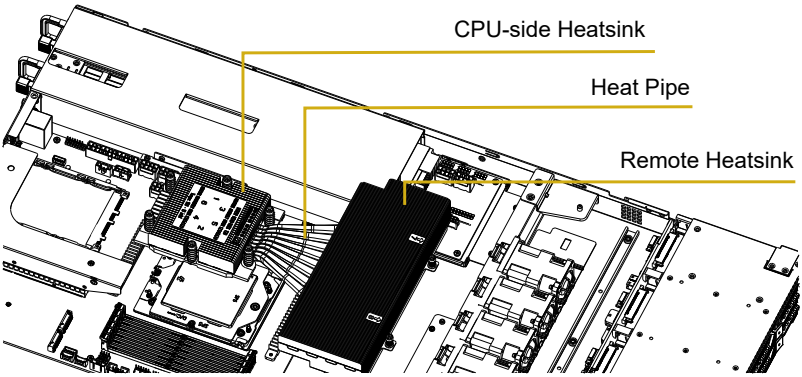


### Installing the EVAC

1. To avoid damaging the heat pipe, make sure to hold both the CPU-side heatsink and remote heatsink simultaneously and place the EVAC on the chassis.
2. Set a T20 Torx screwdriver to a torque of 10.8 ~ 13in-lbf (12.5 ~ 15kg-cm).
3. Tighten the screws in a sequential order 1 > 2 > 3 > 4 > 5 > 6 > 7 > 8.
   Note: Loosen the screws in a reverse order.

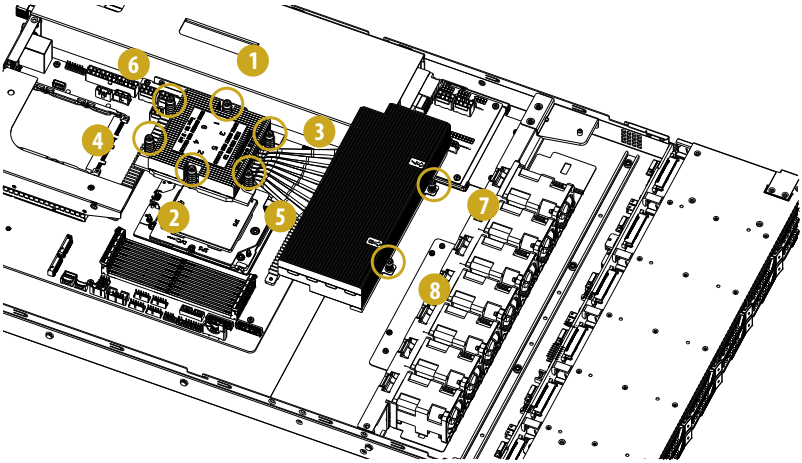

## 3.8 Air Duct

### Installing the Air Duct

Align the air duct with the remote heatsink of EVAC. Place the air duct into the server system.

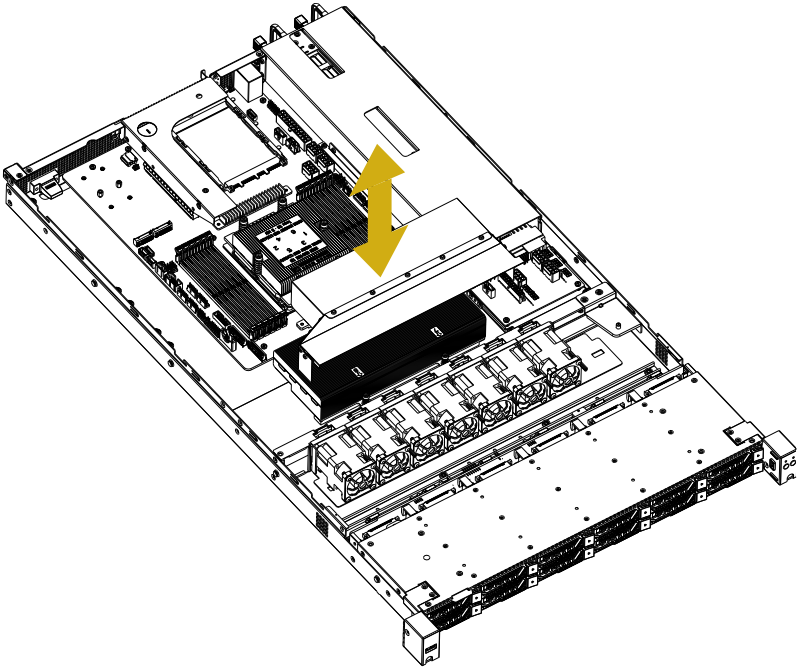

# Chapter 4 Server Motherboard (TURIND12M3-NL/500W/1U12E)

## 4.1 Layout

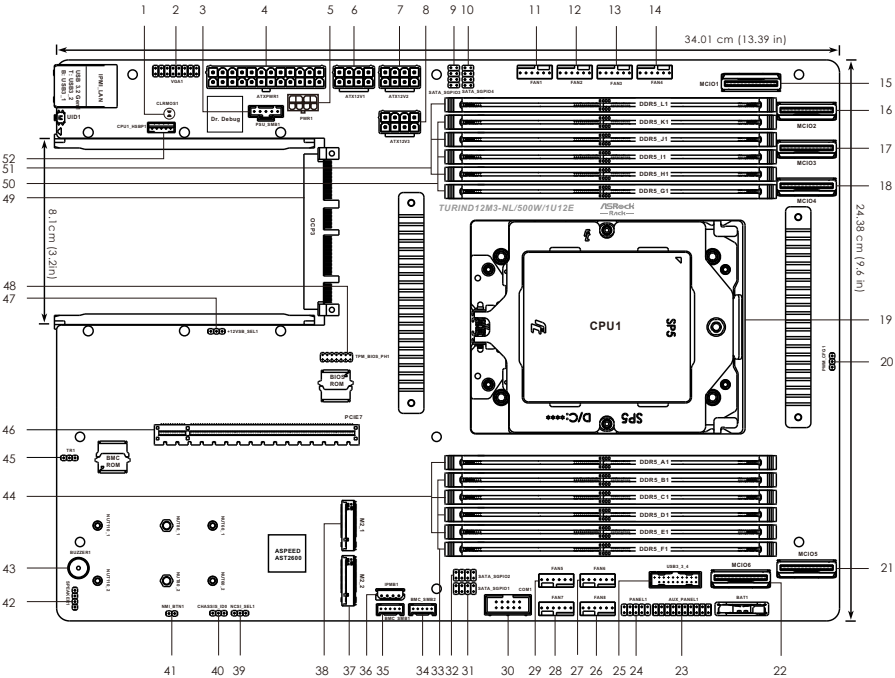

| No. | Description |
|---|---|
| 1 | Clear CMOS Pad (CLRMOS1) |
| 2 | Front VGA Header (VGA1) |
| 3 | PSU SMBus Header (PSU_SMB1) |
| 4 | ATX Power Connector (ATXPWR1) |
| 5 | Micro-Hi Power Connector (PWR1) |
| 6 | ATX 12V Power Connector (ATX12V1) |
| 7 | ATX 12V Power Connector (ATX12V2) |
| 8 | ATX 12V Power Connector (ATX12V3) |
| 9 | SATA SGPIO Connector (SATA_SGPIO3) |
| 10 | SATA SGPIO Connector (SATA_SGPIO4) |
| 11 | System Fan Connector (FAN1) |
| 12 | System Fan Connector (FAN2) |
| 13 | System Fan Connector (FAN3) |
| 14 | System Fan Connector (FAN4) |
| 15 | Mini Cool Edge IO Connector (MCIO1) |
| 16 | Mini Cool Edge IO Connector (MCIO2) |
| 17 | Mini Cool Edge IO Connector (MCIO3) |
| 18 | Mini Cool Edge IO Connector (MCIO4) |
| 19 | AMD Socket SP5 (SM-LGA-6096) (CPU1) |
| 20 | PWM Configuration Header (PWM_CFG1) |
| 21 | Mini Cool Edge IO Connector (MCIO5) |
| 22 | Mini Cool Edge IO Connector (MCIO6) |
| 23 | Auxiliary Panel Header (AUX_PANEL1) |
| 24 | System Panel Header (PANEL1) |
| 25 | USB 3.2 Gen1 Header (USB3_3_4) |
| 26 | System Fan Connector (FAN8) |
| 27 | System Fan Connector (FAN6) |
| 28 | System Fan Connector (FAN7) |
| 29 | System Fan Connector (FAN5) |
| 30 | COM Port Header (COM1) |
| 31 | SATA SGPIO Connector (SATA_SGPIO1) |
| 32 | SATA SGPIO Connector (SATA_SGPIO2) |
| 33 | 3 x 288-pin DDR5 DIMM Slots (DDR5_B1, DDR5_D1, DDR5_F1) |

| No. | Description |
|---|---|
| 34 | MC SMBus Header (BMC_SMB2) |
| 35 | MC SMBus Header (BMC_SMB1) |
| 36 | Intelligent Platform Management Bus Header (IPMB1) |
| 37 | M.2 Socket (M2_2) (Type 2260/2280/22110) |
| 38 | M.2 Socket (M2_1) (Type 2260/2280/22110) |
| 39 | NCSI Mode Jumper (NCSI_SEL1) |
| 40 | Chassis ID Jumper (CHASSIS_ID0) |
| 41 | Non Maskable Interrupt Button (NMI_BTN1) |
| 42 | Speaker Header (SPEAKER1) |
| 43 | Buzzer (BUZZER1) |
| 44 | 3 x 288-pin DDR5 DIMM Slots (DDR5_A1, DDR5_C1, DDR5_E1) |
| 45 | Thermal Sensor Header (TR1) |
| 46 | PCI Express 5.0 x16 Slot (PCIE7) |
| 47 | OCP3 +12VSB Power Jumper (+12VSB_SEL1) |
| 48 | SPI TPM Header (TPM_BIOS_PH1) |
| 49 | OCP NIC 3.0 Slot (PCIe5.0 x16) (OCP3) |
| 50 | 3 x 288-pin DDR5 DIMM Slots (DDR5_G1, DDR5_I1, DDR5_K1) |
| 51 | 3 x 288-pin DDR5 DIMM Slots (DDR5_H1, DDR5_J1, DDR5_L1) |
| 52 | Backplane PCI Express Hot-Plug Connector (CPU1_HSBP1) |

## 4.2 Block Diagram

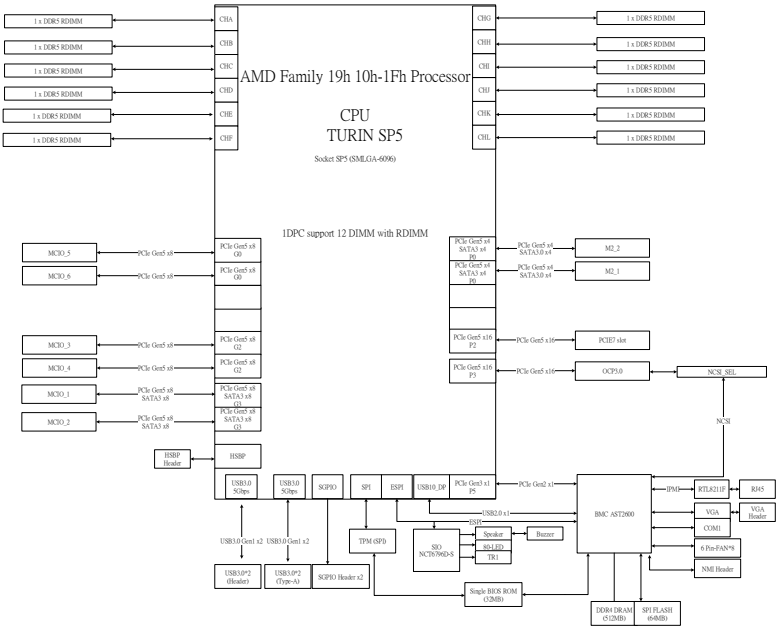


English

## 4.3 Installing the CPU (LGA 6096 Socket)

1. *Before inserting the CPU into the socket, check if the PnP cap is on the socket, if the CPU surface is unclean, or if there are any bent pins in the socket. Do not force to insert the CPU into the socket if above situation is found. Otherwise, the CPU will be seriously damaged.*
2. *Unplug all power cables before installing the CPU.*

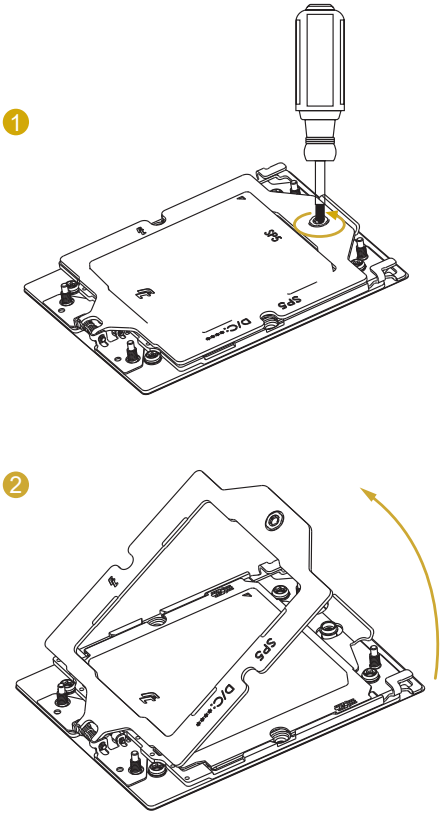

3

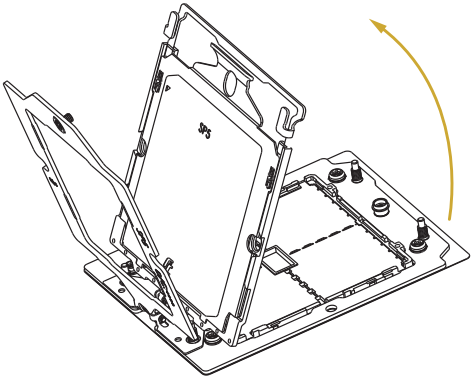


4

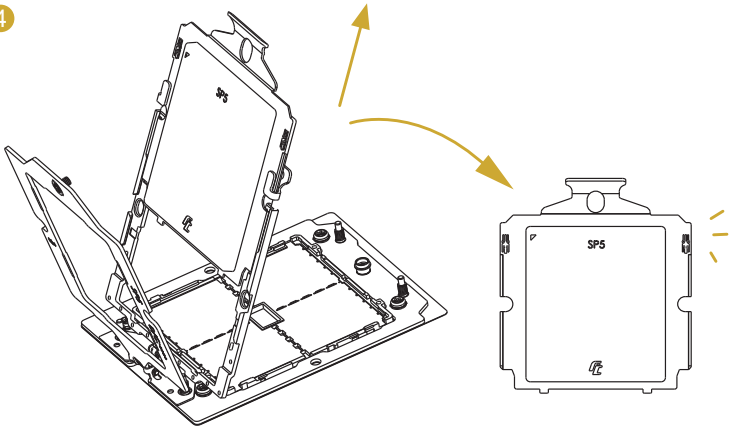

5

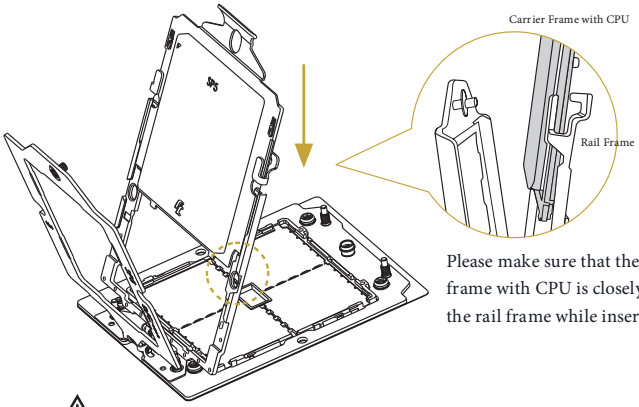


Please make sure that the carrier frame with CPU is closely attached to the rail frame while inserting it.

⚠ Install the carrier frame with CPU. Don't separate them.

6

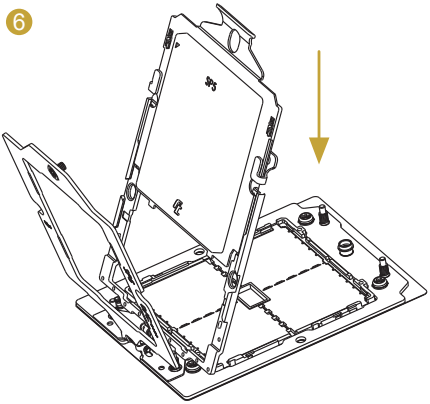

7

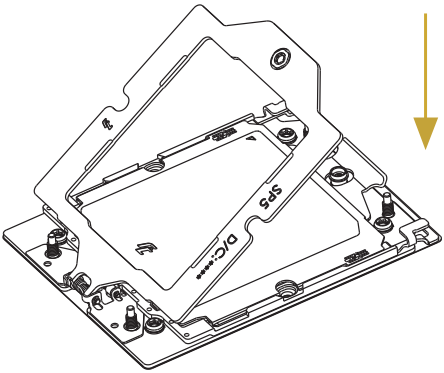


8

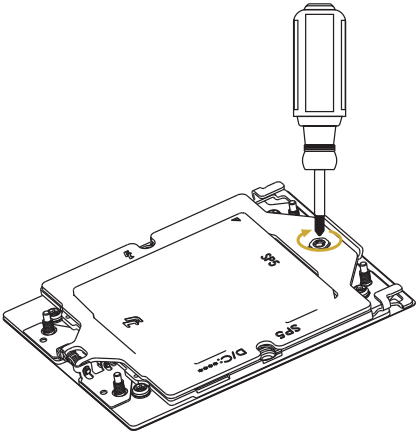

## 4.4 Installing the Memory Modules (DIMM)

*The DIMM only fits in one correct orientation. It will cause permanent damage to the server motherboard and the DIMM if forcing the DIMM into the slot at incorrect orientation. For more information about DIMM installation, refer to the server motherboard user manual.*

1

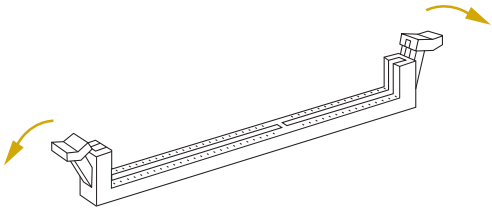

2

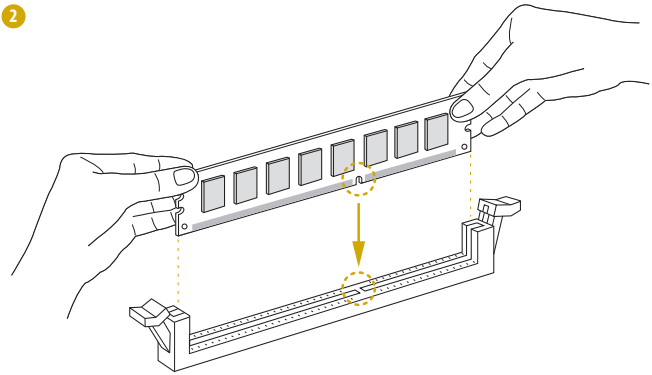

3

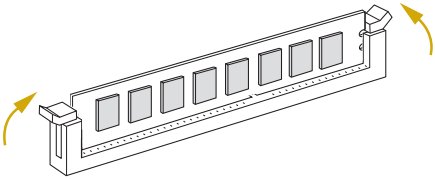

# Appendix

## Installing the Server in a Rack

This section describes how to rackmount the server with slide rail assembly.

*The rails installation instructions in this manual are example only. The actual rail assembly procedure may differ slightly.*

The rail assembly consists of outer, middle and inner rail.

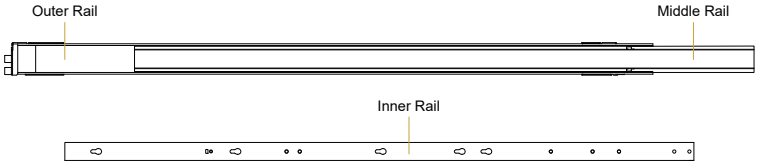


*Each slide rail is labeled with either L or R. Identify prior to rail installation. Install the rail labeled with L on the left side of rack, and the rail labeled with R on the right side of rack.*

### Release the inner rail from the outer rail

1. Fully extend the inner rail from the rail assembly.

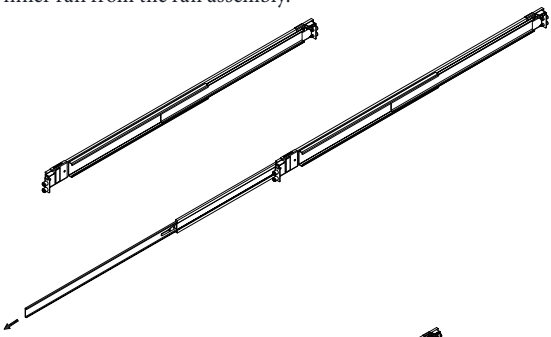

2. Press the release lever on the inner rail to remove it.

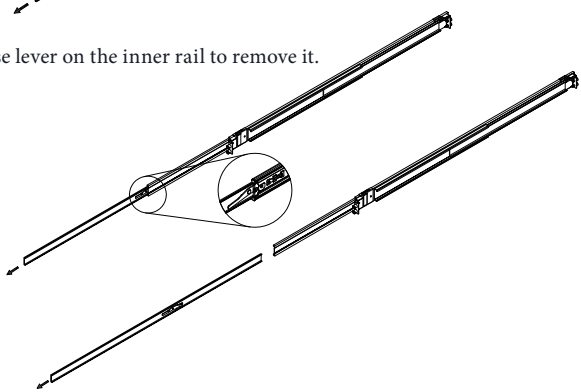

## Attach the inner rail to the chassis

1. Lift the clip on the inner rail.
2. Slide the inner rail toward the chassis rear.
3. Secure the inner rail to the chassis with screw.

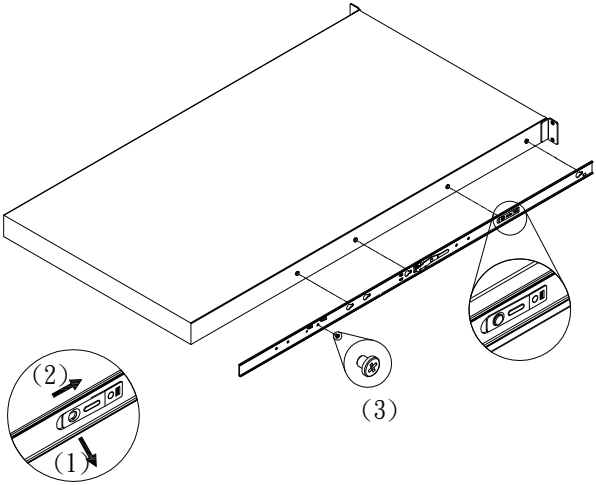


## Attach the outer rail to the rack

1. Lift lever, aim the rack mount pin to the rack post and push forward.

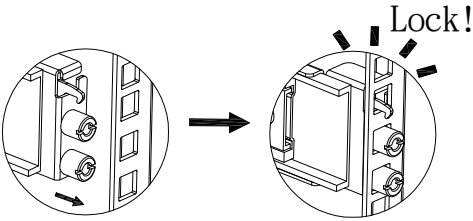


2. Lift lever, aim the rack mount pin to the rack post and pull back.

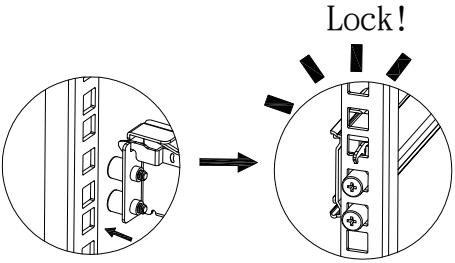

## Mount the server in rack

1. Make sure the outer rail is locked to rack securely.
2. Fully extend the middle rail out of the outer rail until locked.

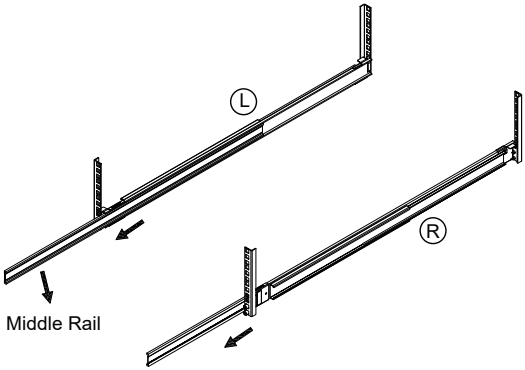


3. Aim the rail to push server into rack.

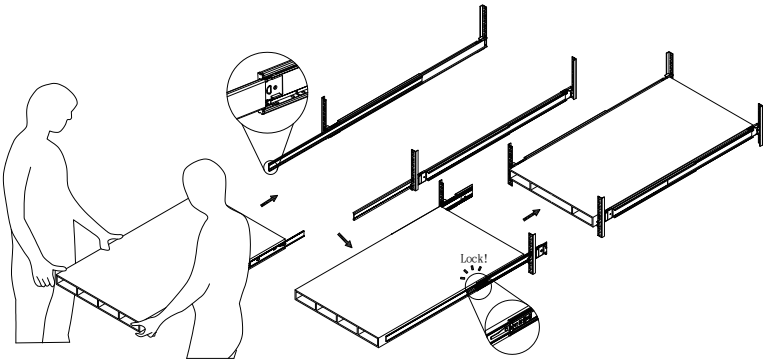


*The server is heavy. For safe lifting, two or more persons are required to install the server into the rack.*

4. Tighten the thumbscrews or screws on the front of server to secure the server to the rack.
5. To remove the server from the rack, reverse these instructions.

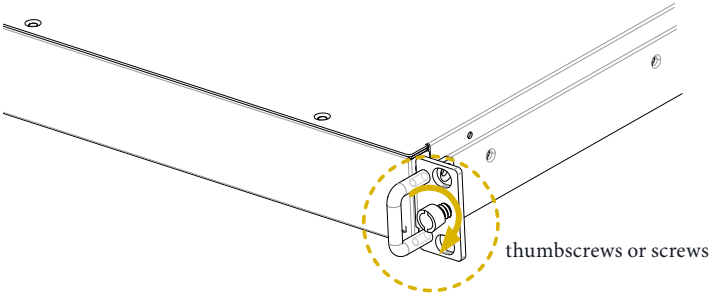


*When connecting cables to the server, make sure there is enough cable slack so sliding the server in and out of the rack without accidentally unplugging a cable.*

## Contact Information

Contact ASRock Rack or want to know more about ASRock Rack, you're welcome to visit ASRock Rack's website at http://www.asrockrack.com; or contact the dealer for further information. For technical questions, please submit a support request form at https://event.asrockrack.com/tsd.asp


**ASRock Rack Incorporation**

e-mail: ASRockRack_sales@asrockrack.com

**ASRock Rack EUROPE B.V.**

Bijsterhuizen 11-11
6546 AR Nijmegen
The Netherlands
Phone: +31-24-345-44-33

**ASRock Rack America, Inc.**

4331 Eucalyptus Ave, Chino, CA 91710 U.S.A.
Phone: +1-909-590-8308
Fax: +1-909-590-1026